THE

WIRELESS ENGINEER

AND

EXPERIMENTAL WIRELESS

VOL. XI. MAY, 1934. No. 128

Editorial

Band-Pass Filters in Receiver Design

IN 1931 a book was published by the Verband Deutscher Ingenieure entitled "Siebschaltungen," by W. Cauer. In reviewing it on p. 26 of the *Wireless Engineer* for January, 1932, we said, "This work will appeal to all those who wish to acquaint themselves with the theory of filter circuits, and it should prove invaluable to those engaged in the actual design of such circuits," but we also pointed out that, although the book was only a 24-page pamphlet accompanied by a portfolio of 68 charts, the design of a filter circuit, even with the aid of the book, was not a thing to be undertaken lightly. Now this is not surprising, for a band-pass filter is in its operation a very complicated apparatus, and the design of one to fulfil a rigid specification cannot but be a task of some difficulty. In the past the band-pass filters incorporated in radio receivers have been relatively primitive affairs, and the ever-increasing demand for quality combined with selectivity is now compelling attention to Cauer's work. Two papers have recently been published by E. Glowatzki of Göttingen* and one by A. Jaumann† dealing with the application of Cauer's methods of design. The latest of these deals definitely with the design of band-pass filters, both fixed and variable, for radio receivers.

In recent numbers of the *Wireless World* Mr. W. T. Cocking has described a new receiving system incorporating some revolutionary ideas, the most novel being the absence of any tuning in the radio frequency system which is designed to pick up and pass on to the heterodyne stage all waves within the broadcasting band, that is, between wavelengths of 200 and 2,000 metres, but to exclude all waves outside this range. This calls for the introduction of a band-pass filter. The intermediate stages of any heterodyne receiver constitute a band-pass filter on the design of which the performance of the set largely depends.

There is a general impression that a filter must consist of a chain of coupled circuits, and that the quality of the filter depends on the number of coupled circuits. Cauer has shown that this is only one of several possible arrangements and that it is not at all essential to have a chain of coupled circuits

* *E.N.T.*, pp. 377 and 404, 1933; * *Hochfq und Elektroakus*, p. 51, 1934.

† *E.N.T.*, p. 257, 1932.

to obtain a high quality filter. The typical filters designed by Glowatzki in his recent publication are of the types shown in Figs. 1 (*a*) and 1 (*b*), which show alternative but

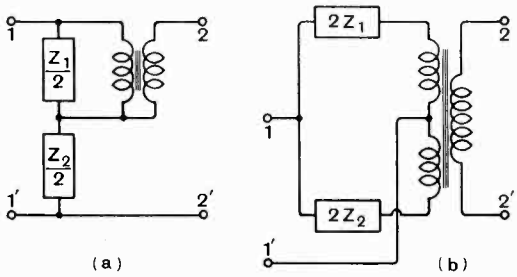

Fig. 1.

equivalent arrangements. The impedances Z_1 and Z_2 consist of a number of oscillatory circuits arranged either as shown in Fig. 2 (*a*) or as shown in Fig. 2 (*b*). If the mean frequency of the pass-band is to be adjustable then in Fig. 2 (*a*) the inductances must be variable, whereas in Fig. 2 (*b*) the condensers must be variable and therefore the latter would generally be adopted. The number of parallel circuits to be employed depends on the performance demanded of the filter. Combining Figs. 1 (*a*) and 2 (*b*) we get Fig. 3, which represents a band-pass filter for radio purposes designed by Glowatzki. The transformer T_f is a 1 : 1 transformer. Had we adopted the arrangement of Fig. 1 (*b*), then each branch would have consisted of $C/2$ and $2L$ instead of $2C$ and $L/2$. Each group may have the same number of parallel paths or the lower group may have one more than the upper, as shown in Fig. 3, so that with improving quality of filter the number of

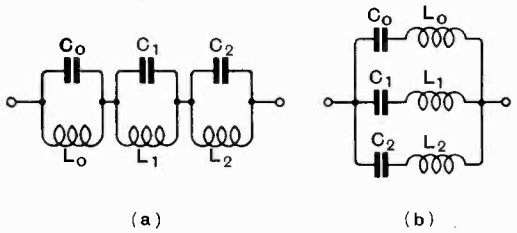

Fig. 2.

parallel paths in the two groups would be $\binom{1}{2}$, $\binom{2}{2}$, $\binom{2}{3}$, $\binom{3}{3}$, $\binom{3}{4}$, and so on, Fig. 3 showing the arrangement $\binom{2}{3}$. The transformer T_i in Fig. 3 is for the purpose of matching the input impedance, and as the output terminals 2, 2′ will probably be connected to the grid circuit of a valve it is essential to shunt them by a suitable resistance R. This question of the terminal impedances is of the greatest importance if the best results are to be obtained from any filter. It will be noticed that all the constituents of Z_1 are given odd suffixes and those of Z_2 even ones. Glowatzki gives a number of tables from which the values of the five inductances and the five capacities can be determined from the specified data. The value of the terminal resistance for which the filter is to be suitable must be decided, also the amount by which the wave-resistance of the filter is to be allowed to fluctuate over the band-pass range. Even in a filter like that shown in Fig. 3, this variation may amount to 50 per cent. and

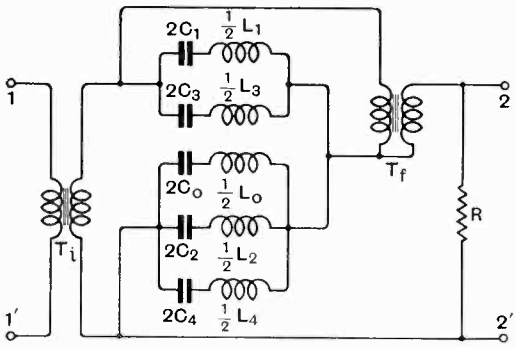

Fig. 3.

it is not advisable to attempt to keep it too constant as that would only be justifiable if the terminal impedances could be fixed with equal accuracy.

In addition to the theoretical width p (Fig. 4) there is the lesser width p_d over which the attenuation is within a prescribed amount of that at the centre frequency f, and the greater width p_s outside which the amplitude will not exceed some prescribed value, say 1 per cent. of that at the centre. If p_s be taken as 9,000 cycles per second, a value of p_d equal to 5,000 can be obtained with a relatively simple filter, but if we wish to put p_d up to 7,000, which means steepening up the sides of Fig. 4, nearer the ideal rectangle, it will be found that a more complex filter, that is, one with more elements, will be necessary. This would

appear at once from the curves and tables. In the paper referred to a filter of the type

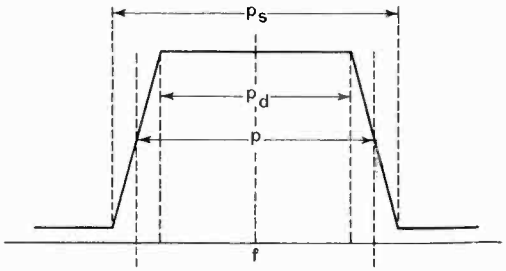

Fig. 4.

shown in Fig. 3 is calculated for radio frequencies, the five condensers being ganged variable condensers of five different capacities. The carrying out of such a design would present very great difficulties compared with the fixed frequency heterodyne type. The author discusses these difficulties, as well as those introduced by the necessity of switching over to a different set of condensers for the long-wave range; the same coils suit both ranges since the values of the inductances depend on p but not on f.

It is not possible in this editorial note to attempt a detailed discussion of the subject, our object is only to bring this work to the notice of those interested in the theory or practice of electrical filters.

G. W. O. H.

The Wireless World
Single-span Receiver

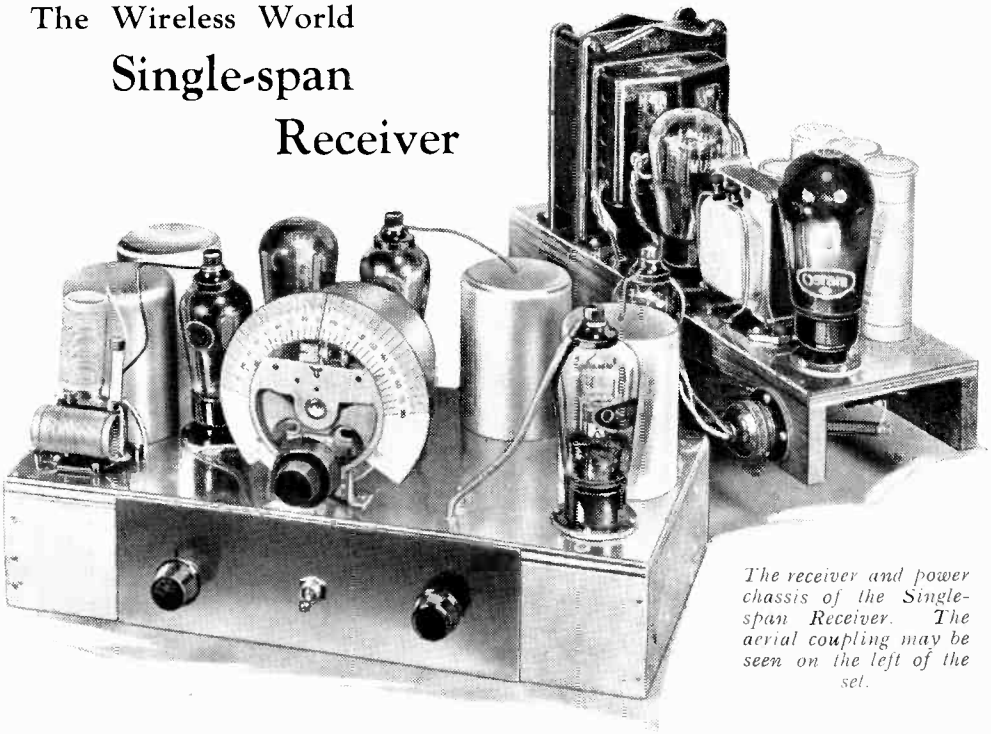

The receiver and power chassis of the Single-span Receiver. The aerial coupling may be seen on the left of the set.

THE special aerial coupling of the Single-span Receiver can be seen on the left of the chassis; this coupling passes frequencies from 150–1,500 kc/s with little loss but gives great attenuation over the second channel frequency range. An unusual feature of the receiver is the use of reaction on the I.F. circuits, which are tuned to 1,600 kc/s, and in order to obtain smooth operation it is necessary to apply it from a bufier valve. By the combination of an untuned aerial circuit and a high intermediate frequency, a tuning range of over 200–2,000 metres is secured without coil changing: moreover, all tuning can be carried out by the oscillator condenser—matched coils and a gang condenser being unnecessary.

Precision Heterodyne Oscillators*

By W. H. F. Griffiths, F.Inst.P., A.M.I.E.E., Mem.I.R.E.

SUMMARY.—In this article several essential design features of the heterodyne type of audio-oscillator are discussed—more particularly those affecting calibration permanence and frequency drift. It is felt that an explanation of the various factors contributing to calibration uncertainty and instability is needed since their neglect has hitherto precluded the use of the convenient heterodyne method of generation for really good oscillators.

The best accuracy and stability to be expected from this class of oscillator are given and expressions for these quantities formed. Some design features of American Models are criticised.

A simple approximate formula is developed for the design of the variable condenser to give a logarithmic law of frequency and typical plate shapes shown together with a new method of condenser plate design which ensures greater capacity stability than is possible with ordinarily shaped plates.

The recently developed Ryall-Sullivan Oscillator is briefly described and its performance given in detail.

MANY attempts have been made to produce really stable and accurate audio-frequency oscillators of the heterodyne type. Most of these attempts have been made by radio or telephone engineers responsible for acoustical quality. The smooth and continuous variation of frequency throughout a wide range obtained in a single sweep of a variable condenser has, of course, appealed to them. But most of the designs attempted have been, or are, sadly lacking the qualities of frequency stability and calibration permanence. The mixing of the outputs from the two radio-frequency generators, their pre-detection amplification, the detection, filtering and low-frequency amplification have been thoroughly understood and this portion of the design fairly well carried out, but insufficient care has been given to the design of the radio-frequency generators. It has not been generally appreciated that these generators must be of the utmost precision and that the special knowledge of the precision instrument designer is therefore necessary in their design.

Factors Influencing Frequency Stability and Calibration Permanence

The various sources of instability of frequency and inconstancy of calibration will be described commencing with the effect of the initial frequencies of the radio-frequency generators upon the beat frequency they produce. It is perhaps necessary to define frequency instability and calibration inconstancy in order to distinguish clearly between them.

Frequency instability.—Drifting or change of beat frequency for any (untouched) scale setting. Or, in its most serious form, a scale error due to an insufficiently frequent setting of the two radio-frequency generators to frequency equality when the scale indicates "zero beat."

These frequency variations and uncertainties occur over periods of minutes or hours only and are usually only serious throughout a test period.

Calibration inconstancy.—The scale error after a long period (of years, perhaps) has elapsed, which cannot be corrected by setting the heterodyning frequencies to equality when the scale indicates zero beat frequency.

Let F = heterodyne beat frequency.
f_1 = frequency of fixed frequency radio generator.
f_2 = frequency of variable frequency radio generator.
C_1 = effective resonant circuit capacity of the fixed frequency generator.
C_2 = capacity of the variable frequency generator when the frequency of the latter is adjusted to equality with that of the fixed frequency oscillator, *i.e.*, at "zero" scale setting of the beat frequency scale.

The inductances L_1 and L_2 of the fixed and variable frequency oscillators respec-

* MS. accepted by the Editor, December, 1933.

tively are usually equal in value and, since this is good practice for the reasons explained later in the article, it will be assumed that

$L_2 = L_1$ and, therefore, $C_2 = C_1$.

$C_2 + \Delta C_2 =$ the effective capacity of the variable frequency generator to produce a beat frequency F.

θ = angular movement of scale of the frequency calibrated variable condenser from "zero beat" setting.

If F is small compared with f_1

$$F = \frac{\Delta C_2}{2C_1} \cdot f_1$$

and $$f_1 = \frac{k_1}{C_1^{1/2}}$$

therefore $$F = \frac{k_1 \Delta C_2}{2C_1^{3/2}} \quad \ldots \quad \ldots \quad (1)$$

For a constant setting of the variable condenser of the variable frequency oscillator ΔC_2 is constant[1]

therefore $$k_1 \cdot \frac{\Delta C_2}{2} = f_1 C_1^{1/2} \cdot \frac{\Delta C_2}{2} = k_2$$

and $$F = \frac{k_2}{C_1^{3/2}} \quad \ldots \quad \ldots \quad (2)$$

since $$f_1 = \frac{k_1}{C_1^{1/2}}, \; C_1^{3/2} = \frac{k_1^3}{f_1^3} = \frac{k_3}{f_1^3}$$

and substituting this in (2) we get

$$F = \frac{k_2 f_1^3}{k_3} \text{ where } k_3 = k_1^3$$

$$= k_4 f_1^3 \quad \ldots \quad \ldots \quad \ldots \quad (3)$$

therefore $F \propto f_1^3$

One Extremely Stable Radio Generator is Essential

It is seen therefore that the frequency accuracy and stability of the fixed frequency oscillator of the heterodyne system must be at least three times better than that expected of the final beat frequency calibration.

Since other factors contribute to the uncertainties of the calibration, however, a long period permanence of f_1 of at least ten times that required of the calibration should be aimed at. It is seen, therefore, that in order to obtain a calibration better than 0.25 per cent. the best possible stability and permanence is demanded of at least one of the radio-frequency oscillators. Such oscillators, with a frequency permanence over a period of years of the order 0.01 per cent., are only possible if the greatest care is exercised in both design and construction of inductance and capacity components of the resonant circuit and in the choice of circuit for generation.

By the use of the author's highly stable and temperature coefficientless type of inductance,[2] now well known, and soundly constructed air condensers or temperature coefficientless fixed mica condensers a long period frequency permanence of 0.01 per cent. has been obtained in circuits oscillating on the dynatron principle.[3] Oscillators constructed from more ordinary components invariably fall hopelessly short of the required permanence and for this reason it is not surprising to find that good commercial beat-frequency oscillators are guaranteed to hold their calibration accuracy for one year to only 2 per cent. whereas by employing the special components mentioned above an accuracy over a period of years at least six times better is claimed as will be seen in the description of the precision heterodyne oscillator given later in the article.

Since the beat frequency is proportional to the cube of the *fixed* radio frequency it follows that the daily stability of the latter frequency must at least be three times better than that required of the former even if this were the only cause of instability. There are, however, quite a number of other sources of frequency instability so that in practice one should endeavour to eliminate this source entirely—not as the Americans do, by resorting to piezo crystal stabilisation, for this produces other troubles as will be explained later—but by a reduction of temperature coefficients of both inductance and capacity and by suitably selecting stable operating conditions of dynatron operation. In a laboratory where the daily temperature variation is of the order $\pm 4°$ C, the tem-

[1] Assuming, of course, that the zero of the scale is set to "zero beat" and that the calibration remains unchanged.

[2] Constructed on a thermal compensation principle—Pat. No. 326190. *See* article by present author in *The Wireless Engineer*, Vol. VI, pp. 543–549.

[3] For the description of such an oscillating circuit *see* article by the present author, "The Simplification of Accurate Measurement of Radio Frequency," *The Wireless Engineer*, May and June, 1933.

perature coefficients of inductance and capacity are invariably the most serious cause of instability of f_1 whereas the most serious cause of long period change of this frequency (not of F) may, with the very best of resonant circuit components, be valve replacement. The inductances of both radio-frequency generators must, of course, be well shielded individually so that "pull-in" does not occur until the beat frequency is reduced to a very low and unwanted value and also to make sure that the "mixing" of the outputs is properly under control. This perfection of shielding must not, however, be permitted to increase the coil losses unduly for it can be shown that the frequency instability of the dynatron oscillator

$$\frac{\Delta f_1}{f_1} \Big/ \frac{\Delta r}{r} \propto \delta^2$$

where δ is the logarithmic decrement of the resonant circuit, f_1 the fixed oscillation frequency and r the negative resistance of the dynatron operating valve.[4]

Suitable Oscillator Valves and the Effect of their Replacement upon Calibration

Before leaving the explanation of the effect of f_1 upon the beat frequency F it should be stated that valve replacement in the fixed frequency generator affects calibration and for this reason the L/C ratio of this generator should be kept low in order to reduce the importance of the effective inter-electrode capacity of the valve. For the same reason a screen-grid valve should be employed for dynatron operation in order to take advantage of the low anode to screen-grid capacity (which is the capacity effective in augmenting the resonant circuit capacity in this case) which most valves of this class have. Valves with flat plate anodes of small area are very desirable, because the capacity differences between valves of the same type are likely to be much smaller. The Mullard S4VA and S4VB valves have been found by the author to be most suitable in this respect. Owing to this effect of valve capacity variation the calibration should be effected using a valve of mean capacity and it should be remembered that the capacity deviation from the mean capacity taken as a percentage of C_1 produces a 50 per cent. greater effect upon F.[5]

[4] *See* article given in footnote 3.
[5] Because $F \propto f_1^3$ and $f_1 \propto C_1^{1/2}$.

The effect of the frequency f_1 of the fixed frequency generator upon the beat frequency F has now been dealt with in some detail and the precautions given strictly apply only to this particular oscillator. It will be shown later, however, that it is very desirable to make the fixed portion of the variable frequency oscillator exactly similar in order to obtain stability although for calibration *permanence* this is not essential.

Calibration Uncertainties Due to the Quality of the Variable Condenser

In addition to the permanence and stability of f_1 there are two other main sources of instability of F, one of which, and the first to be given, is also a source of calibration inconstancy. This is the imperfection of the variable condenser ΔC_2 by which the frequency f_2 is varied. The maximum beat frequency is usually limited to one-tenth of the heterodyning frequencies and if this is so

$$F \doteqdot \frac{\Delta C_2}{2C_1} \cdot f_1$$

and if f_1 and C_1 are constant, it may be said that

$$F \propto \Delta C_2$$

with an accuracy sufficient for the present purpose. It is seen therefore that the variable condenser should have a constant percentage constancy and stability at all capacity settings. This condition is not easily fulfilled in a variable condenser of a heterodyne oscillator owing to the large variation of $dC/d\theta$ required to produce a logarithmic scale. There will be a tendency for greater instability and lack of permanence at the higher frequencies owing to the large radius of the moving plates operative at this portion of the scale. It is possible, however, to design a variable air condenser having a permanence of the order 0.1 per cent. for a period of five years. Even so, this source of long period calibration change (together with valve replacement in the fixed frequency generator) may be predominant if, with a given valve, the frequency permanence of f_1 is of the highest order obtainable commercially.

The short period daily stability of the well-designed variable condenser is usually sufficiently good to ensure that this is not the predominant factor in determining the

final stability of the beat frequency. In all but the very best condensers relative geometrical uncertainties of the plate systems are generally responsible for greater instability than temperature coefficient.

Frequency Drift—The Importance of Temperature Coefficient

There is just one other factor which influences the beat frequency, for the difference $f_1 - f_2$ is only proportional to ΔC_2 if f_1 is constant *and f_1 and f_2 are exactly equal when the scale of the variable condenser is set to zero.* Any differences in the behaviour of the two heterodyning oscillators occurring in the interval between successive scale (zero) settings will therefore produce instability of F even for the ideal conditions of perfectly constant f_1 and perfectly constant ΔC_2. It is for this reason that the main fixed portion L_2C_2 of the resonant circuit of the variable frequency generator should be made similar to that, L_1C_1, of the fixed frequency oscillator. The circuits should be surrounded by similar screens and their associated valves should be mounted externally so that the temperatures of the circuits shall not be affected by them but by the ambient laboratory temperature only.

Even the slight difference in behaviour of similarly constructed circuits is sufficiently great to be the most serious cause of beat frequency instability. This difference is due almost entirely to differences of temperature coefficients of the inductances and fixed condensers which result in a frequency drift of f_2 relative to f_1. This drift causes a frequency change which is constant throughout the entire range of beat frequency and is therefore very serious at the lower frequencies. Below a frequency of 3,000 or so, this is usually the overwhelmingly greatest cause of frequency drift throughout the daily run.

This is so even with very specially designed and carefully constructed resonant circuit components such as those already mentioned—the temperature coefficients of inductance being matched to within 0.00025 per cent. per degree Centigrade and those of capacity to within 0.0003 per cent. per degree. When it is realised that these circuits, matched to the limit of precision laboratory measurement of temperature coefficient to within a few parts in a million, may, and often do, exhibit a frequency drift of one cycle per second throughout a daily run, it is not difficult to understand why seemingly impossible frequency drifting is experienced in quite good commercial oscillators.

Crystal Control Not Effective in Stabilising Frequency

It is the practice in American heterodyne oscillators, the author believes, to control the frequency of the fixed frequency generator by means of a piezo-electric crystal. While this is admittedly an excellent device to preserve a fair degree of calibration constancy over long periods where really good resonant circuits are not available, it has a very bad effect upon short period stability. If the natural stability of a resonant circuit is poor enough to need crystal stabilisation then it is reasonable to suppose that the temperature coefficient of the other circuit must be much higher than that of the crystal. Hence the large frequency drifts of 15 cycles per second in two hours advertised for these oscillators compared with 1 cycle per second *per day* in the precision oscillator with similar resonant circuits of the author's design.

Other minor causes of "drift" between the frequencies f_1 and f_2 are the different effects of supply voltage variations upon the two oscillators—negligible where the dynatron method of oscillation is employed—and a change of permitivity of the solid dielectric material used in the construction of the variable air condenser. This change may be due to temperature variation and produces, in effect, a change of the fixed capacity C_2 and not of the variable capacity ΔC_2. It is usually small but may contribute somewhat to instability at low frequencies in the very best precision oscillators.

Frequency Drift Need Not Affect Calibration Permanence—Scale Setting

Neither this nor the other causes of frequency drift between f_1 and f_2 may be said to affect the permanence of beat frequency calibration because permanent differences are from time to time adjusted by a small capacity variable "scale setting" condenser which is permanently connected in parallel with one of the heterodyning oscillators. It is the function of this condenser to bring the frequencies of the two oscillators to equality with the scale of the main calibrated variable condenser set to zero frequency at

the commencement of, say, a daily run. It is important that this auxiliary variable condenser should be associated with the *variable* frequency oscillator for it has already been shown that $F \propto f_1^3$ and for this reason it is imperative that a possible cumulative drift between f_1 and f_2 shall not ultimately produce an appreciable change in the value of f_1.

The Design of the Frequency Calibrated Variable Condenser

It has already been stated that the beat frequency F is directly proportional to the change of capacity, ΔC_2, of the variable condenser and that it is difficult to obtain the necessary constant percentage permanence and stability of capacity throughout the entire range of the condenser. Before explaining the author's method of overcoming this difficulty an approximate method will be given for designing the shape of moving plate required for any range of beat frequency and for any frequency of heterodyning oscillators.

If F is small compared with f_1

$$F = \frac{\Delta C_2}{2C_1} \cdot f_1$$
$$= k_5 \Delta C_2 \quad .. \quad .. \quad .. \quad (4)$$

where $k_5 = \dfrac{f_1}{2C_1}$

and if the desirable logarithmic law of beat frequency is to be fulfilled

$\dfrac{dF}{d\theta}$ must be proportional to F

therefore $\dfrac{dF}{d\theta} = bF$ when b is a constant.

The law which satisfies this condition is, of course, the exponential law

$$F = a\epsilon^{b\theta} \quad .. \quad .. \quad (5)$$

therefore $k_5 \Delta C_2 = a\epsilon^{b\theta}$.

The equation to the capacity curve of the variable condenser must therefore be

$$\Delta C_2 = a_1 \epsilon^{b\theta} \quad .. \quad .. \quad (6)$$

When $\theta = 0$, $\epsilon^{b\theta}$ becomes unity and so the constant a_1 is the minimum value of ΔC_2 corresponding with the lowest beat frequency F required to be calibrated.

Also, when $\theta = 180$, ΔC_2 must be the maximum value of added capacity required to produce the highest beat frequency to be calibrated, and so:

$$C_{max.} = C_{min.} \epsilon^{180b}$$

therefore $\log C_{max.} = \log C_{min.} + 180b \log_{10}\epsilon$

from which $$b = \frac{\log C_{max.} - \log C_{min.}}{78.174} \quad .. \quad (7)$$

ΔC_2 is a composite capacity consisting of the minimum capacity plus that due to actual plate area in operation, which will therefore have to be proportional to

$$\Delta C_2 - C_{min.}$$

Therefore from (6) the area of plate at any angle θ is given by

$$A = k\{a_1\epsilon^{b\theta} - C_{min.}\} \quad .. \quad .. \quad (8)$$

where k is a constant depending upon the total plate area. A term must be added to compensate for that semi-circular portion of the moving plate which is rendered inoperative by the cut away portion of the fixed plates round the spindle of the condenser—an inoperative area which is a sector of a circle of radius r and is

$$\frac{\theta}{2 \times 57.3} \cdot r^2 = K\theta$$

therefore $A = k\{a_1\epsilon^{b\theta} - C_{min.}\} + K\theta \quad .. \quad (9)$

When $\theta = 180$, A is, of course, the total plate area, and if this is given, the value of the constant k may be found, for:

Total plate area $= k\{C_{max.} - C_{min.}\} + 180K$

from which $k = \dfrac{\text{Total plate area} - 180K}{C_{max.} - C_{min.}}$.

Since the area of a small sector of the

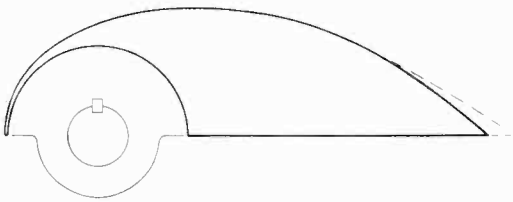

Fig. 1.—*Moving plate for a beat frequency of 10–10,000 per second calculated from the approximate formula (10). The dotted extension shows the correct plate shape.*

moving plate $\delta A = \dfrac{\delta\theta}{2 \times 57.3} \cdot R^2$ it follows that the radius R at any angle θ is:

$$R = \sqrt{114.6 \frac{dA}{d\theta}}$$

from (9) $\dfrac{dA}{d\theta} = ka_1 b\epsilon^{b\theta} + K$

therefore $R = [114.6\{ka_1 b\epsilon^{b\theta} + K\}]^{\frac{1}{2}} \quad .. \quad (10)$

It should be remembered that this formula has been evolved from the assumption that F is small compared with f_1 and this condition is hardly satisfied for a beat frequency of 10,000 cycles per second when the heterodyning frequencies are of the order 10^5 per second. For frequencies of this order, however, the approximation is sufficiently accurate both for estimation of scale in-

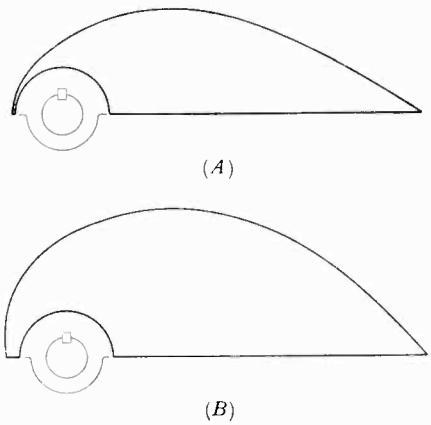

Fig. 2.—*Plate shapes for beat frequencies of 10–12,000 per second (A) and 185–12,000 per second (B).*

accuracy due to frequency drift, and for plate shape design, up to 10,000 or 12,000 cycles per second. An example of plate shape has been computed by the above formula (10) for a beat frequency range of 10–10,000 cycles per second and is shown in Fig. 1. The slight inaccuracy of this plate shape is indicated by the dotted correction. The error is not at all serious, it being quite unnoticed in the corresponding scale.

Scale Accuracy

Using the same constants, the scale reading accuracy may be found. The smallest scale distance that can be read with accuracy, and without difficulty, provided that adjacent scale divisions are not much farther apart than the usually accepted 1 millimetre, is of the order 0.01 inch of scale circumference.

This distance expressed as an angle $\delta\theta$ in degrees is:

$$\delta\theta = \frac{0.01 \times 180}{\pi R_s} = \frac{0.573}{R_s}$$

where R_s = scale or dial radius in inches.

The scale reading accuracy expressed as a ratio is

$$\delta\theta \cdot \frac{dF}{d\theta} \Big/ F$$

or

$$\delta\theta \cdot \frac{dC}{d\theta} \Big/ C$$

$$C = a_1\epsilon^{b\theta} \text{ and } \frac{dC}{d\theta} = a_1 b\epsilon^{b\theta}.$$

Expressed as a percentage the scale reading accuracy is therefore:

$$\frac{57{\cdot}3}{R_s} \cdot \frac{1}{C} \cdot \frac{dC}{d\theta} = \frac{57{\cdot}3\, a_1 b\epsilon^{b\theta}}{R_s a_1 \epsilon^{b\theta}} = \frac{57{\cdot}3b}{R_s} \quad \ldots \quad (11)$$

which is seen to be constant throughout the range of the oscillator—a characteristic of the logarithmic scale for which purpose it is employed.

The accuracy to which the scale can be *set* to cardinal frequencies can generally be taken to be one-half of the reading accuracy.

Avoiding Exaggerated Plate Shapes

In order to obtain the wide range of frequency usually associated with heterodyne oscillators, a very exaggerated plate shape will be found necessary.

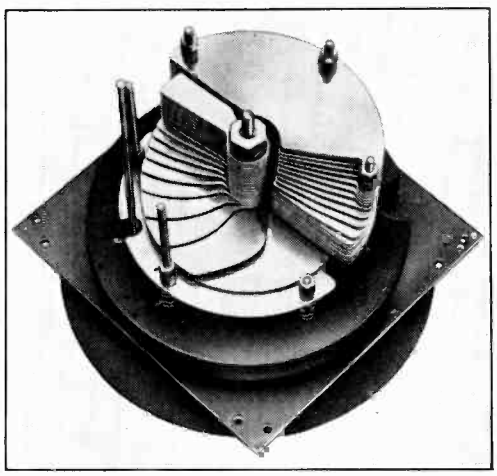

Fig. 3.—*The special form of variable condenser similar to that used for beat frequency adjustment of the Ryall Sullivan Precision Heterodyne Oscillator.*

Using formula (10) the plate required for a frequency range of 10–12,000 cycles per second has been computed and drawn in

Fig. 2 (A) and it will be seen that a very large radius is required in order that an appreciable plate area shall be obtained. Even if the oscillator be divided into two ranges the plate shape is still almost as impossible from a plate stability viewpoint. Fig. 2 (B) shows the shape necessary for a frequency range of 185–12,000 cycles per second and this will be seen to be somewhat better because of its greater area for a given maximum plate radius.

In order to avoid the instability which must necessarily be associated with such exaggerated plate shapes and to obtain a more compact form of condenser, the author has departed from the conventional similar-plate design, by constructing a logarithmic scale variable condenser in which the required law is obtained by varying the number of plates engaged in addition to shaping them.

The illustration of Fig. 3 shows a very robust condenser designed in this way to cover a beat frequency range of 185–12,000 cycles per second by an angular movement of 180 degrees. A similar plate system, designed for a beat frequency range of 0–12,000 cycles per second, is shown in Fig. 4. In this case the total angular movement is 230 degrees and the scale is truly logarithmic above 50 cycles per second, below this the scale is closed up intentionally to give greater reading accuracy on the more useful portion of the range. Fig. 5 shows the frequency curve of this condenser which will be seen to be remarkably true to law for such a complicated plate system. The author hopes to give the method of designing this condenser in another article.

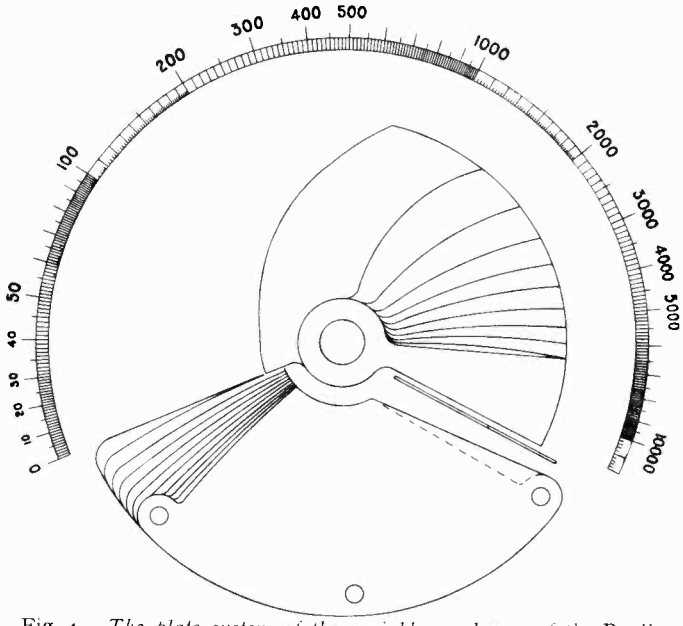

Fig. 4.—*The plate system of the variable condenser of the Ryall Sullivan Oscillator, designed for a beat frequency of 0–12,000 per second.*

The Ryall Sullivan Precision Heterodyne Oscillator

Now that the various features affecting frequency calibration, permanence and stability of heterodyne oscillators have been discussed, it is thought that a very brief description of an oscillator in which these features have been carefully studied will be of interest. In this oscillator the author was responsible for the design of the heterodyning oscillators and it was his endeavour to obtain the best stability possible in a laboratory oscillator of reasonable bulk. The details of calibration stability obtained should therefore be of interest. The remainder of the oscillator was developed in the Research Department of the Post Office by Dr. L. E. Ryall who has succeeded in producing excellent output voltage/frequency characteristics and purity of waveform.

The oscillator is illustrated in Fig. 6, which is a front view showing all shields in place, and Fig. 7 showing the back of the panel with all shields removed. The diagram of the oscillator is given in Fig. 8 from which all filament and cathode heater circuits are omitted.

The heterodyning oscillators are independently shielded in stout copper boxes, the interiors of which can be seen in Fig. 7 at the bottom of the panel. Their frequencies $f_1 f_2$ are adjusted to 100 kilocycles per second and they are exactly similar in construction. Each has a Sullivan-Griffiths thermal compensated inductance, $L_1 L_2$, and a fixed

capacity mica condenser, C_1C_2, of a special temperature coefficientless type. The coils have temperature coefficients $< \pm 0.0008$ per cent. per degree Centigrade matched to within ± 0.00025 per cent. per degree and the condensers have temperature coefficients $< \pm 0.001$ per cent. per degree selected to have differences $< \pm 0.0003$ per cent. per degree. The oscillators are dynatron operated by screen grid valves, V_1V_2, one of which is to be seen between the oscillator shields.

One of the oscillators has its frequency reduced from 100 to 88 kc/second (in order to produce a beat frequency scale of 0 to 12,000 cycles per second) by a variable condenser ΔC_2 of the special stable design already described and illustrated in Fig. 3. In addition this oscillator has incorporated a very low capacity "scale setting" variable condenser C_3 which is seen in Fig. 6, mounted on top of the right-hand oscillator—the main calibrated variable condenser being mounted in the large shielding case above the left-hand oscillator.

The Frequency Stability of the Heterodyning Oscillators

The oscillators are so completely shielded that they do not "pull-in" until the heterodyne beat frequency difference $f_1 - f_2$ is reduced below 0.2 per second — thus rendering possible an accurate method of "zero beat" scale setting in lieu of the more usual tuned reed device for scale setting at some fairly high frequency. In spite of this complete screening the decrements of the resonant circuits are so low that, with suitably adjusted dynatron operation, changes of $\pm$ 10 per cent. in both H.T. and L.T. supply voltages produce frequency changes in f_1 of less than $\pm$ 1 part in 100,000 and the differences between the changes of f_1 and f_2 are negligible. The change of beat frequency due to this cause is therefore seen to be entirely negligible—less than 0.003 per cent. or 0.3 cycles per second at a beat frequency of 10,000! In fact the stability of f_1 is such that its effect upon the beat frequency throughout a period of eight hours including a temperature fluctuation of $\pm$ 4 deg. C. is less than 0.02 per cent. The daily instability of beat frequency due to differences between the temperature coefficients of the resonant circuits of the two oscillators may be as high as 1 cycle per second at all frequencies for the same temperature variation.

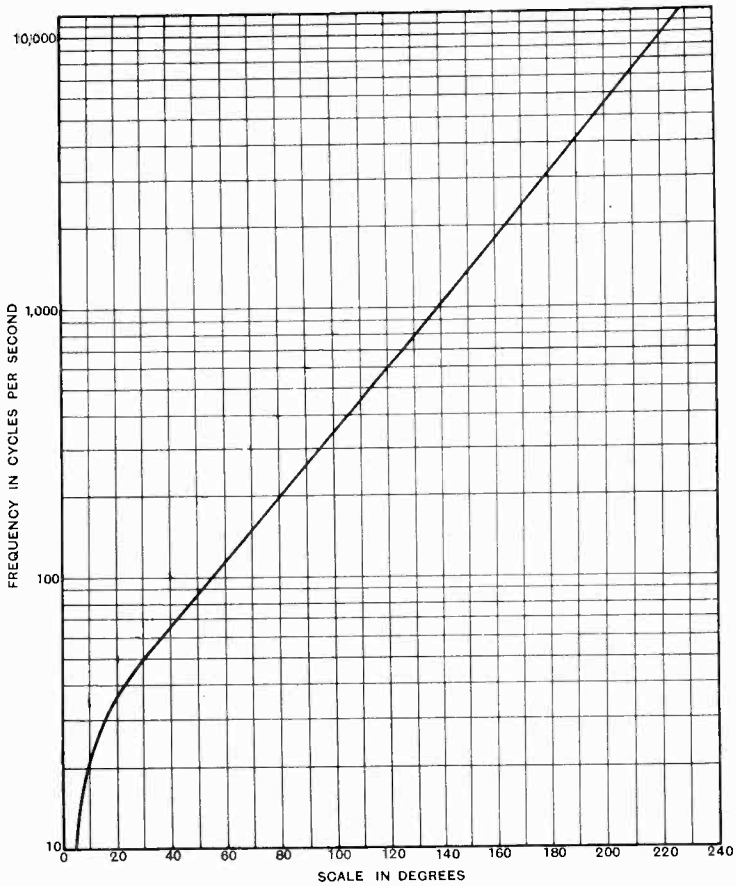

Fig. 5.—*The frequency calibration of the Ryall Sullivan Oscillator.*

The inconstancy of f_1 over a period of years is 0.01 per cent., but to this must be

added a possible $\pm 1\ \mu\mu F$. variation of resonant circuit capacity consequent upon the replacement of the valve V_1. This capacity uncertainty together with the other

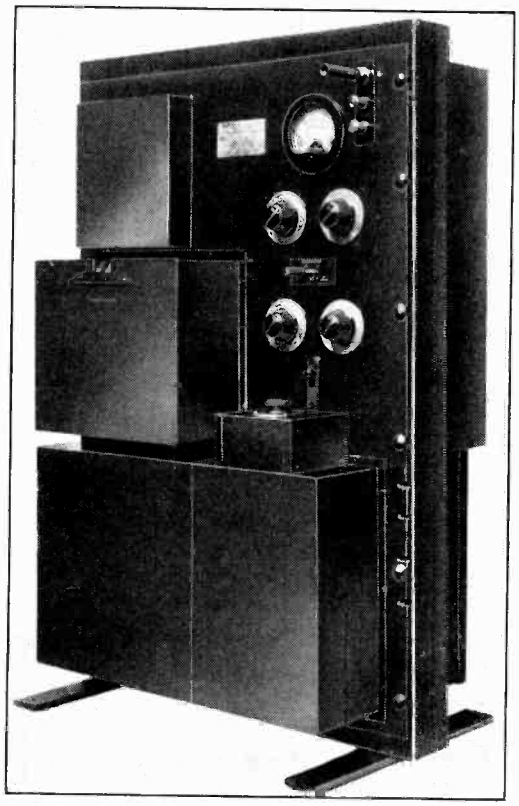

Fig. 6.—*The Ryall Sullivan Precision Heterodyne Oscillator.*

changed characteristics due to valve replacement and changes of L_1 and C_1 may in the worst case cause a 0.05 per cent. change in f_1 throughout a period of years resulting in a calibration error of 0.15 per cent.

Stability of Beat Frequency and Permanence of Calibration

The special variable condenser ΔC_2 has a capacity stability throughout 8 hours with $\pm$ 4 deg. C. temperature change of 0.015 per cent. and its permanence throughout a period of years is of the order 0.1 per cent. The resultant maximum instability of beat frequency from all causes is therefore only 0.05 per cent. + 1 cycle per second throughout the day and from immediately upon switching on. The extraordinary stability of 0.01 per cent. + 0.2 cycle per second is obtained over test periods of 15 minutes or so. The resultant maximum calibration error *after a period of years* from all causes is 0.25 per cent. These figures represent, the author believes, the best commercially attainable and should therefore be of interest.

Mixing the Outputs—The H.F. Amplification

The outputs from the above described radio-oscillators are taken to two potential dividers R_1 and R_2, the latter adjusting the main "carrier" frequency potential applied to the grid of the high frequency amplifier valve V_3 (to suit the detector valve characteristic) and the former adjusting the much weaker "output control" potential. These two input potentials are adjusted by observing the changes of anode current of the detector valve V_5 on the milliammeter M. The potential tapping of R_3 provides a fine adjustment control of amplitude.

The valve V_4, which provides a second stage of high frequency amplification, is immediately followed by a band pass filter consisting of shunt elements L_4C_4, L_6C_6,

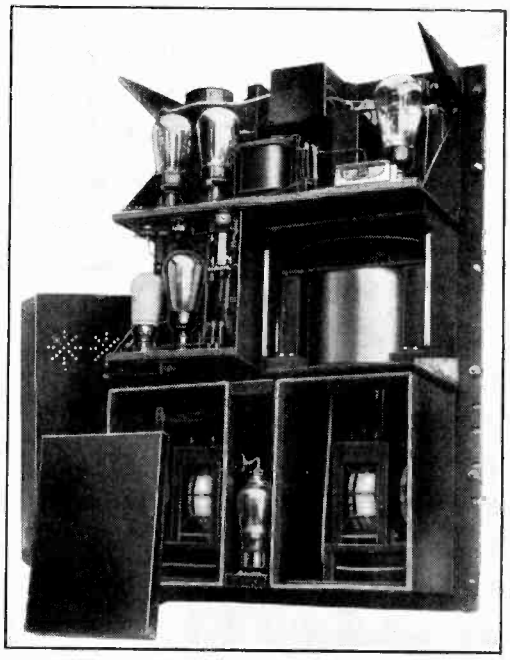

Fig. 7.—*Rear view of the Ryall Sullivan Oscillator with shielding cases opened to show the heterodyning oscillators.*

having natural frequencies of 95 kc/s and the series element L_5 having a natural frequency of 200 kc/s.

High Frequency Loss Compensation

In order to correct for the usual high frequency losses in the beat frequency amplifier due to capacity leakage and leakage inductance, the capacity C_6 may be judiciously increased above the value required to tune L_6 to 95 kc/s (corresponding with a beat frequency of 5,000) so that a rising voltage/beat frequency characteristic is obtained above 5,000 cycles per second. That this rising characteristic may be made to correct the falling characteristic of the amplifier is clearly shown in Fig. 9, where it is seen that with the proper correction, the output voltage is constant to within 0.05 decibel of the low frequency voltage up to a beat frequency of 10,000 per second.

Low Frequency Loss Compensation

The output from the detector valve V_5 is taken through a low pass filter $C_7L_7C_8L_8C_9$ to a beat frequency amplifying valve V_6 in the anode circuit of which low-frequency loss compensation is provided. The method of compensation, which is effected by the condenser C_{10} in series with the resistance R_{10} the whole forming a shunt to R_{11}, is obvious, and its effect upon the lower frequency output characteristic of the oscillator is shown clearly in Fig. 10.

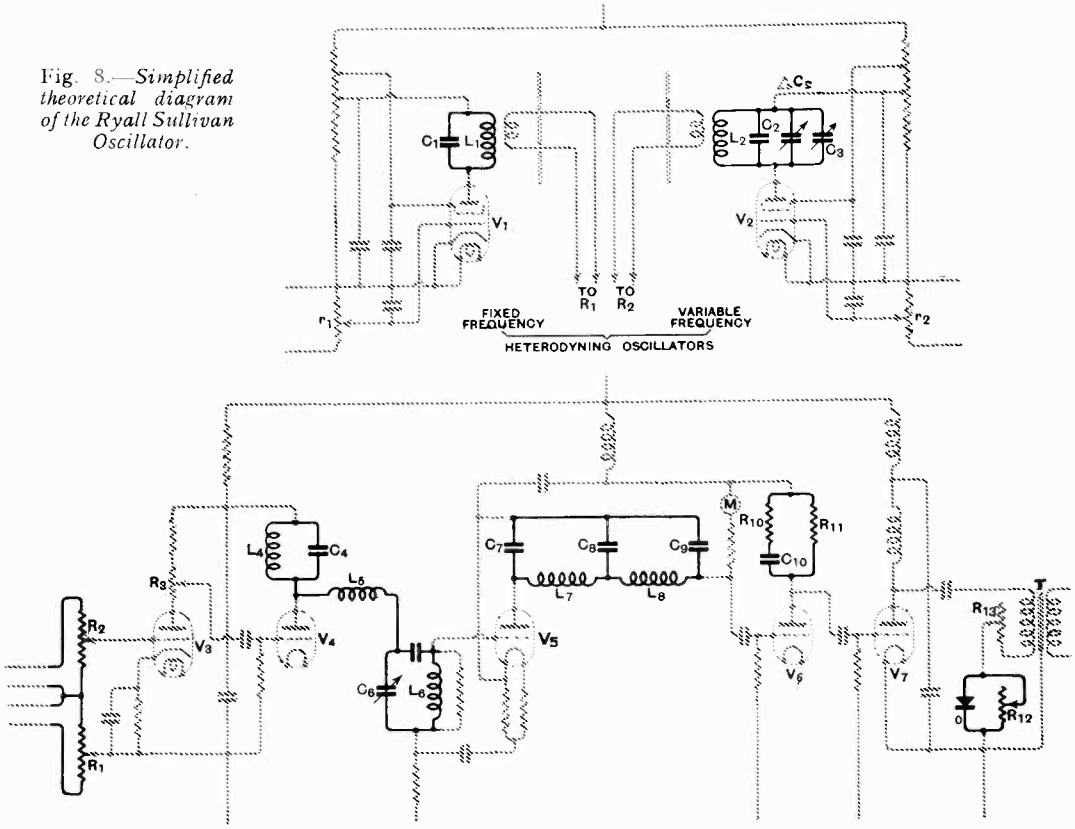

Fig. 8.—*Simplified theoretical diagram of the Ryall Sullivan Oscillator.*

When the value of C_{10} is adjusted to 0.12 μF. it is seen that the compensation is sufficiently perfect to limit the variation of output voltage to within $\pm$ 0.05 decibel of the high-frequency voltage down to a frequency of 20 per second. The uncompensated low-frequency characteristic is also shown.

The total variation of output voltage from 20 to 10,000 cycles per second is therefore limited to $\pm$ 0.05 decibel for a load of 600 Ω and does not vary more than $\pm$ 0.2 *db* for load changes to 300 or 1,200 ohms. Moreover, output changes with L.T. and H.T. supply fluctuations of 5 per cent. are limited to 0.4 db. and 1.3 db. respectively.

and supply voltages can be maintained more closely than 5 per cent.

The Output Stage—Harmonic Elimination

The output from the power valve V_7 is taken to the primary of a transformer T designed especially to give a balanced output for telephone circuits, the description of which falls outside the scope of this article.[6] The resistance R_{13} is also of interest to telephone engineers since by its adjustment the output impedance can be made 600 ohms —another condition necessary for telephone circuits.

The metal oxide rectifier O and its associated shunt R_{12} are, however, of more general interest. In combination they form a novel and extremely effective device for reducing the amount of harmonic present in the same manner as in a thermionic valve and by suitably choosing the type of rectifier and value of shunting resistance, the valve distortion of the oscillator can be com-

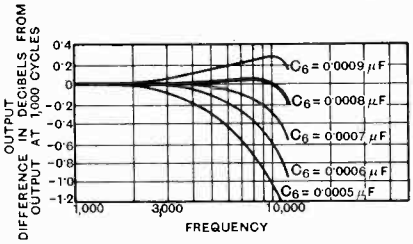

Fig. 9.—*The adjustment of output/frequency characteristic at high frequencies.*

pensated and reduced by at least 10 decibels. In practice the value of R_{12} is adjusted to completely balance out the second harmonic for an output of 100 mW. and the curves of Fig. 11 show the harmonic content for smaller and greater loads.

Power Output and Harmonic Content

From these curves it will be seen that the total harmonic content is less than 0.3 per cent. for output powers up to 50 mW. over a considerable frequency range. 1 per cent. and 3 per cent. harmonic is present for powers of 100 and 200 mW. respectively. It should be mentioned that these low output powers are due to the low H.T. voltage (140 volts) for which the oscillator has been designed in order to meet telephone repeater station requirements. The oscillator can, however, be run from an alternating current

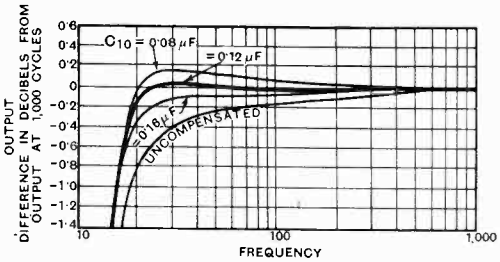

Fig. 10.—*The adjustment of output/frequency characteristic at low frequencies.*

mains unit, in which case the powers corresponding to the above percentages of harmonic content are increased very considerably.

Adjustment and Operation

Although it would appear from a glance at the diagram that the operation is somewhat complicated, this is not so, because many of the adjustments are pre-set and only altered very occasionally as, for instance, in the case of the replacement of a valve. Adjustments $r_1 r_2 R_2 C_6 R_{12}$ and R_{13} are in this manner eliminated. R_1 and R_3 need adjustment only for coarse and fine output control respectively and C_3 is necessary for scale setting perhaps at the commencement of the day.

In conclusion the author would like to be permitted to tender his apologies for the inclusion of so many details of the performance of this oscillator and to offer as an

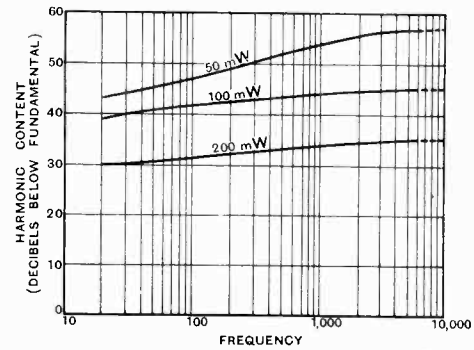

Fig. 11.—*The harmonic content of the Ryall Sullivan Heterodyne Oscillator.*

excuse his belief that they represent the best that can be obtained from a commercial oscillator of the heterodyne type—and that they will therefore prove of interest.

[6] The reader is referred to a more complete description of this and other features of this oscillator of particular interest to the telephone engineer in a paper entitled "A Few Recent Developments in Telephone Transmission Testing Apparatus" to be read by Dr. L. E. Ryall before the Institution of Post Office Electrical Engineers on 8th May, 1934.

Positive-Grid Valve as a Detector* †

The "Brake-Audion" or Retarding-Field Valve as a Detector, for Broadcast and other Frequencies

By H. E. Hollmann

SUMMARY. The "brake-field" valve differs from the ordinary, space-charge-controlled valve in the fact that the functions of the electrodes are interchanged, the grid becoming the actual anode, with positive potential, while the more distant anode, now the "brake-electrode," takes over the task of controlling the current flowing to the grid. This control no longer takes place by action on the space-charge distribution, but by action on the current distribution. If the brake-field valve were completely saturated the amplification factor would be infinitely great. Since this condition can only be reached approximately, a tungsten-cathode valve will actually give an amplification factor of 500, and an oxide-cathode valve one of from 60 to 70. The characteristics of the brake-field valve, in the field of working now dealt with, are dependent practically only on the distribution of electron velocities, and not on the radii of the electrodes.

If the working point is arranged to lie in the region of the lower bend of the brake-field characteristic, the valve functions as a rectifier—as, in fact, a "brake-audion." In order to avoid the dissipation of energy in the brake-field gap, the "current-exchange" for the radio-frequency carrier‡ is short-circuited by a capacitive bridge between brake-electrode and grid. Adjustment to the correct working point takes place automatically by means of a fixed high resistance, which must be shunted by a large capacity. With large signal carrier amplitudes the working point moves along the linear curve of the resistance, through the rectifying-characteristic curve field; as a result, an automatic amplitude regulation takes place. Simultaneously, the charging voltage of the shunting condenser can be employed to regulate the high-frequency pre-amplification in such a way as to give automatic volume control. This regulating potential may also be used to control the sensitivity of the brake-audion itself, thus giving a completely self-regulating rectifier.

ORIGINALLY, as is well known, the brake-field or Barkhausen-Kurz valve was used only for the generation and reception of ultra-short waves down to ten centimetres or thereabouts in wave length. In contrast to the older theory that the cause of the ultra-short-wave oscillations of a brake-field circuit was a pendulum action of the electrons round the grid, recent investigations have attributed the setting-up of these ultra-high frequencies to an ordinary retroaction effect, the inertia of the electrons being only dealt with by the introduction of the so-called "ultra-dynamic characteristics," which undergo an inversion when the phase difference between current and control potential reaches 180 deg.[1] Moreover, while the usual explanation of the rectifying action of a brake-field valve was inclined to postulate the existence of complicated resonance phenomena between the electron oscillations and the frequency of the incoming signals, it has now been shown by more than one worker that the rectifying action of the brake-field valve, even at ultra-high frequencies, is the result of the non-linear relation between current and voltage at the brake-electrode.[2] After the brake-field valve had thus been deprived of its special position in the decimetre wave-field and had been brought into line with the ordinary rectifiers with non-linear characteristics, experiments were set on foot to utilise the "brake-audion" for broadcast reception. These experiments led to a series of new and interesting view-points, which will be dealt with in the following pages.

The current-distribution characteristics of a brake-field valve can be most simply understood if the motion of the electrons between grid and brake-electrode (Fig. 1) is considered. The electrons leaving the

* MS. accepted by the Editor, January, 1934.

† Based on a number of papers on the same theme published or about to be published in various German journals.

‡ See below, page 247.

[1] Hollmann, *Hochf:tech. u. Elek:akus.*, 1933, Vol. 42, p. 32: *Wireless Engineer Abstracts*, 1933, pp. 563–564.

[2] Carrara, *Prac. Inst. Rad. Eng.*, 1932, Vol. 20, p. 1615: Hollmann, *Hochf:tech. u. Elek:akus.*, 1933, Vol. 42, p. 89: *Wireless Engineer Abstracts*, 1934, pp. 34–35.

cathode K are accelerated to the positive grid: some of them strike the grid, others penetrate its mesh and arrive in the opposing field of the brake-electrode. If the brake potential e_b is positive, all these electrons reach it; but if it is negative, they reverse

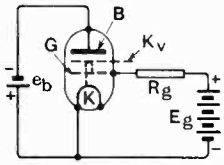

Fig. 1.—*Diagram of the brake-field valve.*

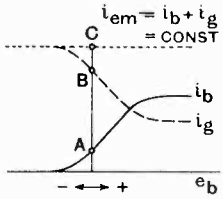

Fig. 2.—*Brake- and "current-exchange" characteristics.*

in front of the brake-electrode B and return to the grid G. Thus a region of very high space-charge density is formed close to B, where all the electrons come to rest and then, according to the potential conditions, either pass to the brake-electrode or return to the grid. All the properties of an actual cathode can be attributed to this reservoir of electrons, so that it may be represented as a virtual cathode (K_v in Fig. 1).

If one could generate strictly "monochromatic" electrons, with only one common speed, the current i_b to the brake-electrode, plotted as a function of the brake potential e_b, would take the form of a right-angled curve. Actually, however, the electrons emitted by the cathode have a velocity distribution corresponding to the filament temperature, as a result of which the brake characteristic $i_b = f(e_b)$ undergoes a rounding-off of the lower and upper bends, as shown by the full-line curve of Fig. 2. Carrara has shown that the virtual cathode forms itself at a very small distance from the brake-electrode.[3] The result of this, combined with the large surface of that electrode, is a very great thinning of the space charge, so that the latter can only make itself felt for large brake currents i_b, the course of i_b up to 10^{-3} amp. following the Maxwellian velocities exclusively.[4] Since, in the rectification of modulated high-frequencies, the region of the lower bend of the brake characteristic is used (*e.g.*, the working point A of Fig. 2) this means that the radii of the electrodes have no influence on the mode of action and the sensitivity of a brake-audion.

If we now consider the course of the current i_g flowing to the grid as a function of the brake potential, we obtain the dotted curve of Fig. 2. If the grid potential E_g lies above the saturation value, the total emission current i_{em} coming from the cathode is constant, and since this is distributed between grid and brake-electrode according to the formula $i_g + i_b = i_{em} = \text{const.}$, it is seen that the brake characteristic must derive itself in mirror-image fashion from the grid characteristic. Thus, if the brake-electrode is subjected to an alternating voltage, the same alternating currents will flow in the grid circuit as in the brake circuit, but with opposite signs. If the condition of saturation in the grid space is adhered to, the brake-field valve can be loaded in its grid circuit by any desired resistance R_g without any effect on the characteristic.

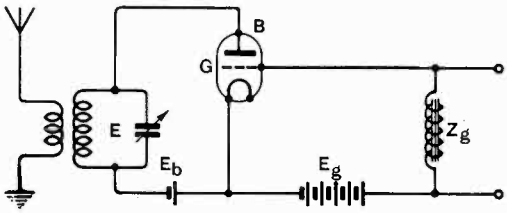

Fig. 3.—*Simple brake-audion.*

Theoretically, therefore, with complete saturation any desired figure for the amplification may be obtained: the amplification factor is infinite.

Actually, of course, this assumption is not completely fulfilled, since we can only approximate to complete saturation. The nearest approach is given by valves with pure tungsten cathodes, in which a slope of the characteristic $i_g = f(e_b)$ of 0.33 mA/V. gives an internal resistance of 1.5 megohms, corresponding to an amplification factor of 500. For valves with indirectly heated oxide cathodes the internal resistance only reaches 2×10^5 ohms, and the amplification factor falls to 66. Nevertheless, such valves are quite useful for the brake-field method.

A circuit based on the above considerations, for the reception of any wavelength with the

[3] *Loc. cit.* (2).

[4] Hollmann, *E.N.T.*, 1934, Vol. 11, p. 3: *Wireless Engineer Abstracts*, 1934, p. 205.

brake-audion, is shown in Fig. 3. The radio-frequency potentials induced by the receiving aerial A in the input circuit E are led to the brake-electrode B. There, provided the working point is properly adjusted by a suitable choice of the brake-electrode bias E_b, they are rectified, and the modulation currents are transferred to the grid circuit, where they are converted at the loading resistance into voltage fluctuations. To avoid unnecessarily high grid potentials it is desirable to replace a purely ohmic resistance by an impedance Z_g; for then the grid voltage E_g need exceed the saturation value only by the amount of the modulation amplitude, whereas with a purely ohmic resistance R_g it must cover as well the whole voltage drop $i_g \times R_g$ of the steady current.

The arrangement according to Fig. 3 displays, however, a fairly satisfactory sensitivity only under very definite conditions, only, in fact, when the impedance of the input circuit E is very small. The reason for this is that the brake-field path forms a heavy load on the control potential, since the latter must provide the brake-electrode current i_b. Thus, for a valve of the slope mentioned above the internal brake-field resistance R_{ib} ($= de_b/d_{ib}$) amounts to 3,000 ohms, and it is natural that the brake-audion, in the form so far described, would fail completely on broadcast wavelengths, where the impedance of the tuning circuit, at resonance, amounts to about 10^5 ohms. Only in the field of ultra-short waves of a few metres' length can the simple brake-audion reach the sensitivity of the

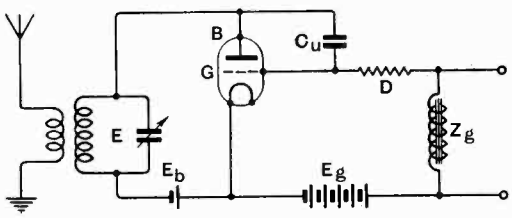

Fig. 4.—*Brake-audion controlled without power dissipation.*

ordinary detectors; for here the resonance circuits, owing to the predominant capacitive component, have resonance impedances more or less of the same order as a brake-field resistance of 3,000 ohms.

If, then, the brake-audion is to be employed for the longer waves, the waste of control energy must be eliminated. It is now possible to do this, by the device of

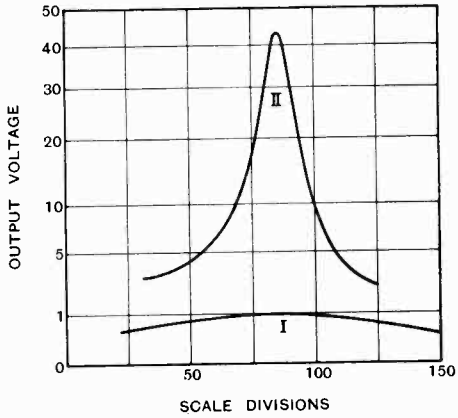

Fig. 5.—*Resonance curves of Figs. 3 and 4.*

applying the control potential of the circuit E to work not only at point A of the brake characteristic but also, simultaneously, at point B on the grid-current characteristic. The circuit arrangement by which this can be accomplished is shown in Fig. 4, where the r.f. potential of the tuned circuit E is applied first to the brake-electrode B and then, by way of the capacity C_u of some 100$\mu\mu$F., also to the grid G; an escape of radio-frequency current into the grid circuit being prevented by the choke D.[5] The load current for the control potential then flows no longer through the input circuit, but equilibrates itself through C_u to the grid. The action of the "capacitive short-circuiting of r.f. current-exchange" is seen more clearly from the curves of Fig. 2; here, since $i_b + i_g = i_{em}$, the control potential acts at the imaginary working point C on the pure saturation characteristic, and the power dissipation is compensated. The capacity C_u acts as a very high resistance to the l.f. rectified currents, so that the latter can only find their way through the load impedance Z_g.

The action of the capacitive short-circuit through C_u is shown clearly by the two resonance curves of Fig. 5, where curve I is that given by the simple brake-audion according to Fig. 3 and curve II is that given by the brake-audion with the control

[5] Hollmann, *E.N.T.*, 1933, Vol. 10, p. 353; *Wireless Engineer Abstracts*, 1933, pp. 621–622.

arranged according to Fig. 4. It is seen that the sensitivity in curve II has been increased 45 times by the compensation of power dissipation. As a result, the brake-audion attains even in the broadcast band the sensitivity of a modern audion with grid rectification, while as regards distortionless detection it is as good as an anode-bend detector.

The exact adjustment of the working point to the region of the lower bend, by means of the biasing voltage E_b, is of decisive importance for the sensitivity of the brake-audion. The provision of a special biasing voltage is, however, unnecessary if it is arranged that the brake potential can adjust itself freely through a high leak-resistance W. If this resistance is of the order of 10^6 ohms, the leak potential must be very strongly positive, and connection can be made directly to the grid-voltage source E_g. For reasons given later, however, it is better to make the leak potential adjustable by means of a potentiometer, as shown in Fig. 6. The arrangements thus arrived at for the adjustment of the working point on the brake characteristic would be quite useless, since the low-frequency detection currents could not find a circuit

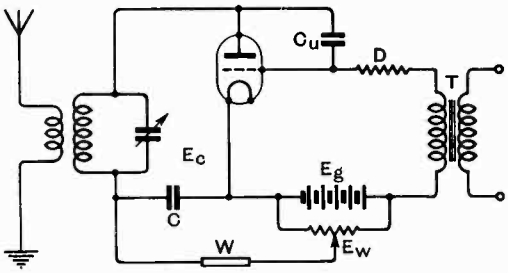

Fig. 6.—*High-resistance shunting of brake-electrode by resistance W.*

through the leak W. The brake circuit must, therefore, be shunted by the condenser C, large enough to offer no resistance to the lowest modulation frequency.

The second and final part of the paper will deal particularly with the automatic volume control action of the "brake-audion."

Short-Wave Wireless Communication*

IN reviewing the first edition of this book in March, 1933, we felt compelled, while recognising its good qualities, to make a number of adverse criticisms. That the authors recognised the justice of those criticisms and appreciated the suggestions made is shown by the modifications which they have made in this second edition, the appearance of which so soon after the first is a proof that the book has filled a real want in radio literature. We expressed our regret that the authors had not obtained some competent guidance in the more theoretical chapters, and we are pleased to note that they have now had the assistance of Mr. T. L. Eckersley. The book is now one which can be unreservedly recommended to anyone interested in this important branch of radio engineering.

We have noted a few errata which the authors may correct in the third edition. They still refer to the system working on a certain *principal* instead of *principle* (p. 271). In two places the German word *frequenz* is mis-spelt (p. 265), and the name Phillips, which appears twice on p. 379, suggests rubber heels rather than valves.

On p. 26 it is stated that "it is assumed that one electrostatic line starts out from every positive unit charge." To make this clear it should have been said that this was a line of displacement or quantity and not a line of force. The strength of the electric field or the electric force 1 cm away from a unit charge is equal to unity, and if lines are drawn such that their density at every point is equal to the electric force at that point, then the total number of lines of force radiating from the unit charge is 4π. We have two equations, one magnetic and the other electric,

$$B = \mu H$$

$$D = \frac{K}{4\pi} E,$$

and all the four magnitudes B, H, D, E can be represented graphically by lines, the density of which should be made or imagined equal to the magnitude which it represents. The lines of *force* per sq. cm, whether magnetic or electric, should be equal to the *force* in dynes or a unit pole or charge placed at that point. If one draws lines of displacement or quantity to represent D or σ then there will be 1 line from unit quantity. This distinction is not so essential in the magnetic case because in air B and H are numerically equal, as D and E would be in a medium with a dielectric constant K of 4π. We have gone into this in some detail because the authors are by no means alone in their usage and it is time that an agreement was come to in the matter of electric lines of force. Unless the force at any point is equal to the number of lines of force per sq. cm, whether magnetic or electric, the graphical conception is likely to be a hindrance rather than a help. G. W. O. H.

* By A. W. Ladner and C. R. Stoner (Second Edition. Revised and Enlarged), pp. 384 + xii, 215 Figs. Chapman & Hall, Ltd., 11, Henrietta Street, London, W.C.2. 15s.

The Crystal Control of Transmitters*

Telefunken High-power Broadcasting Arrangements

By R. Bechmann (Berlin)

THE criterion of quality of a modern transmitter is undoubtedly the degree of its frequency constancy. A high degree of constancy is particularly important for broadcasting transmitters, since the great density of their distribution and the high power of many of them makes it absolutely necessary, if mutual interference is to be avoided, that each should keep rigorously to its allotted band. A glance at the frequency measurements published monthly by the Union Internationale de Radiodiffusion (U.I.R.) with regard to the European broadcasting stations shows what great progress has been made during recent years—and even months—in stabilising the frequencies of these stations. The conferences of the Comité Consultatif International Technique de Communication Radioélectrique (C.C.I.R.) gave guiding lines for the frequency constancy of broadcasting transmitters. While, only a very few years ago, a tolerance of 200 c/s was allowed, to-day a tolerance of only 50 c/s is recommended, while values of 10 c/s and under are demanded by the Broadcasting companies for their high-power transmitters.

The new Telefunken high-power transmitters are equipped with a modern crystal control equipment which gives a very high constancy. This article will describe the details of this new equipment, which has been put to full use, for the first time, at the Bisamberg (Vienna) station.

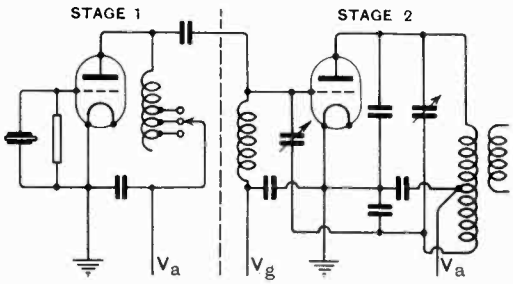

Fig. 1.—*Circuit of quartz control stages.*

The use of piezoelectric quartz plates for the control of transmitters has been known for a long time, but only a technique which ensures the employment of the best circuit, the best mechanical construction, and the best temperature regulation for the quartz oscillators is in a position to provide a really high constancy of frequency. The circuit used in the Telefunken equipment is shown in Fig. 1. The quartz plate is connected between the grid and cathode of the control valve of the first stage. The anode circuit of this stage includes a choke, which for high constancy of frequency must be detuned with respect to the crystal frequency. By this de-tuning the load on the crystal is determined, and it is a property of this method of connection that if the anode circuit is sufficiently out of tune the frequency generated is fixed by the crystal alone and is no longer dependent on small changes in the anode circuit. The control stage (Stage I) is aperiodically coupled to the neutralised isolating stage (Stage II). The anode circuit of this second stage forms the first tuned circuit. By this arrangement reactions on to the crystal are to a great extent avoided. Both these first stages are worked at low voltages; the stages following are high-tension stages.

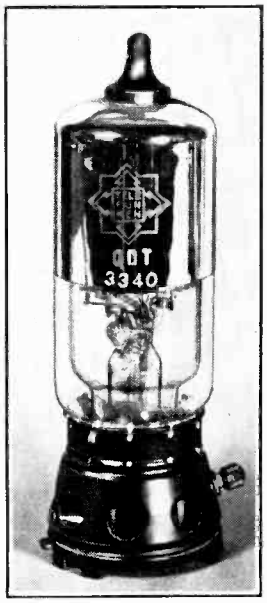

Fig. 2.—*Quartz oscillator and temperature control in bulb.*

* MS. accepted by the Editor, December, 1933.

The design of the quartz oscillator itself is of the utmost importance for constancy of frequency. A mounting which is of low damping, and insensitive to vibration, and

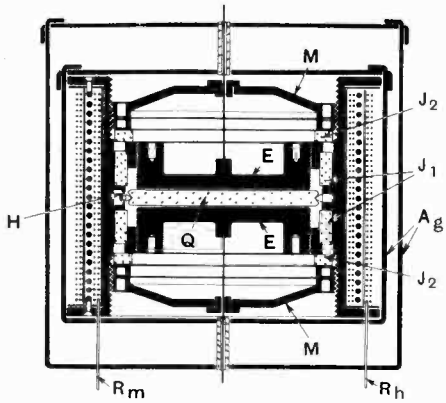

Fig. 3.—*Schematic section through temperature-controlled quartz oscillator.*

a highly effective temperature control, are the most vital requirements. On these points the Telefunken crystal-controlled transmitter is designed with especial care. To protect the sensitive quartz from external disturbances it is enclosed in a glass bulb constructed as a Dewar flask. Fig. 2 illustrates the quartz oscillator, resembling a small transmitting valve. Fig. 3 shows a schematic section through the quartz mounting and the temperature-control coils which are included with it in the glass bulb.

forms a neutral zone for the crystal's mechanical vibrations. Round the circumference of the round quartz disc a groove is cut, in which the three points of the holding ring H press. The electrodes, very close to the faces of the quartz, are fixed by the distance rings J_1 and the insulating rings J_2. Fine thread adjustments allow the optimum gaps between electrodes and crystal to be obtained.

The oscillating quartz plates employed have in general a fairly large temperature coefficient as regards frequency; for the plates generally employed it amounts to about 20.10^{-6} per deg. C. To obtain a frequency constancy of 1.10^{-6}, that is, for instance, 1 c/s on a 300 m. wave, the temperature must be held constant within 1/20th of a degree C. The Telefunken quartz-control equipment uses a novel type of *continuously working* temperature regulation, whose control elements are directly combined with the quartz mounting (Fig. 3). R_m indicates the resistance thermometer winding which controls the regulating process, R_h is a heating winding for maintaining the correct temperature. The heating winding does not completely enclose the quartz holder; to obtain a thoroughly uniform distribution of heat the holder is closed at the top and bottom by the two metal guard caps M. Moreover, the double housing A_g of silver sheet protects the crystal from external thermal influences.

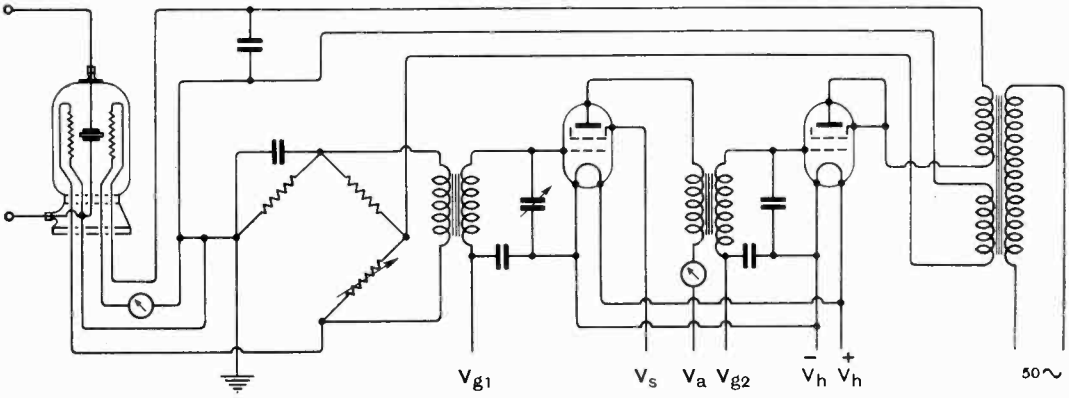

Fig. 4.—*Connections of the temperature control circuit.*

To avoid the damping of the quartz crystal Q by laying it on one electrode, the crystal is held at its middle plane, which

The temperature regulating circuit employed (due to Dr. H. O. Roosenstein) is shown in Fig. 4. The resistance thermometer

winding in the quartz oscillator bulb is made of a material with a high temperature co-efficient, and is connected to form one branch of a Wheatstone bridge whose three other branches are made of resistance material which is unaffected by temperature. The bridge is fed at the two ends of a diagonal from a 50 c/s source of very small power; the "galvanometer" diagonal is represented by the input circuit of a two-stage amplifier, in whose output circuit the heating winding in the quartz oscillator bulb is connected. The mode of action of this arrangement is as follows:

When the bridge is balanced—which, owing to the high temperature-coefficient of the thermometer arm (R_m in Fig. 3), occurs at a definite temperature of the container—the input voltage to the amplifier is zero: the grid bias of the second valve, V_{g2}, is arranged so that the anode current (which is the heating current for the container) is also zero. In the absence of heating current the temperature of the container falls, producing a decrease in the resistance of R_m and therefore a disturbance of the bridge equilibrium. On this happening, a potential appears in the "galvanometer" diagonal of the bridge, and this potential, through the amplifier, increases the current through the heating winding R_h. It is obvious that this arrangement automatically establishes such a state of equilibrium that the heating current continually replenishes the container with the heat lost by radiation from the latter owing to its temperature being higher than that of its surroundings. Thus the temperature to which the container automatically adjusts itself lies immediately below that at which the bridge is balanced. The regulated temperature of the quartz, and therefore its frequency, can be adjusted within certain limits by changing one of the three temperature-independent arms of the bridge; it is thus possible to obtain a very fine adjustment of the required quartz frequency.

Not only when the temperature of the thermometer winding R_m falls below that necessary for equilibrium, but also when it rises *above* that value, does a potential appear in the bridge diagonal. In the latter case the bridge becomes unstable. But since the input potential to the amplifier changes its phase by 180 deg. when the balance point of the bridge is passed through, it is possible, by using for the output valve an alternating anode potential taken from the same source that supplies the bridge potential, to eliminate the unstable temperature zone above

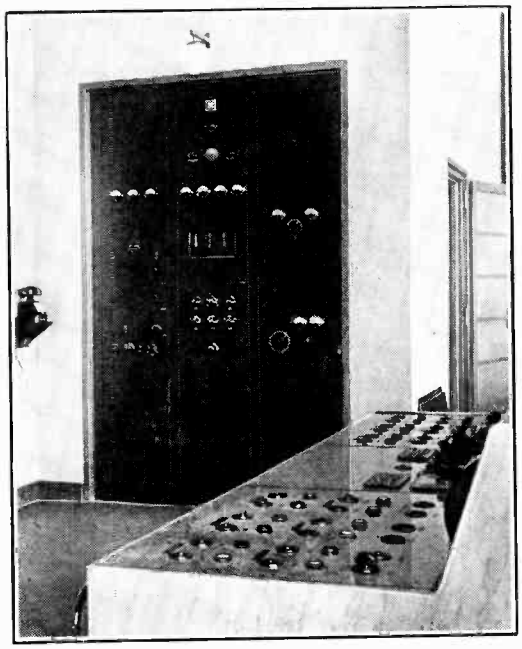

Fig. 5.—*View of the crystal control stage: Part of the transmitting room.*

the balancing temperature: provided only that the amplifier functions true to phase. For in that case in the temperature zone above the balance point the grid a.c. potential and the anode a.c. potential of the output valve are 180 deg. out of phase, so if the grid bias is suitably chosen the anode current is zero.

For a working temperature of the quartz of about 50 deg. C. the heating-up process of the container lasts about 10 minutes. The power used during the heating up is about 3 watts; that required to maintain the temperature is about 0.3 watt. Thanks to the short heating-up time it is not necessary to keep the temperature regulation continually in action; the regulating amplifier need only be switched on simultaneously with the transmitter.

The three frequency-stabilising stages—the crystal stage, the isolating stage, and the temperature regulating amplifier—are

each mounted in a separate box. The three boxes are mounted in a single rack, seen in Fig. 5. In the foreground of this picture, which represents part of the Transmitting Room of the High-Power Broadcasting Station, Vienna-Bisamberg, is the control desk for the transmitting plant: the triple rack at the back contains in its two left-hand units the modulating amplifier, while the right-hand unit holds the three stages described above. At the bottom is seen the front plate of the temperature-regulating amplifier: the adjusting knob with the large scale regulates the temperature-controlling resistance, while the two meters indicate the anode currents of the two amplifier valves. In particular, the meter for the second valve gives the direct value of the heating current to the quartz container. The little glow-lamp below the meters serves as a rough index of the temperature regulation: it lights up whenever the quartz temperature departs by a certain amount from the standard value. Above the regulating amplifier is the crystal-control stage with the quartz crystal; it possesses, as was mentioned earlier, no tuning or adjusting controls. At the top is Stage II, with its knob for anode-circuit tuning; the two meters indicate the grid and anode currents of the valve. The remaining transmitter stages, situated some distance away, are completely free from reaction on the quartz.

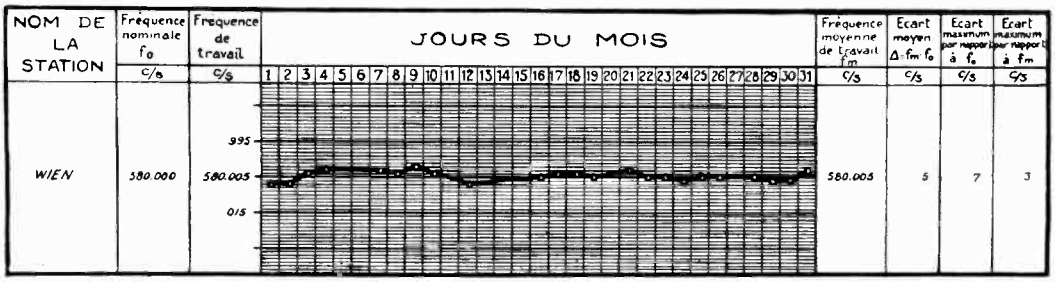

Fig. 6.

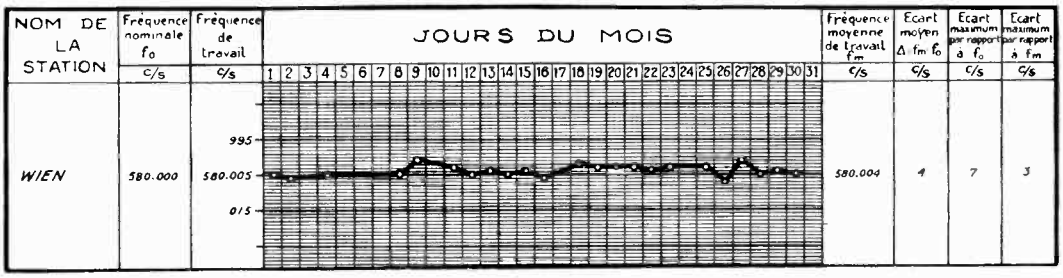

Fig. 7.

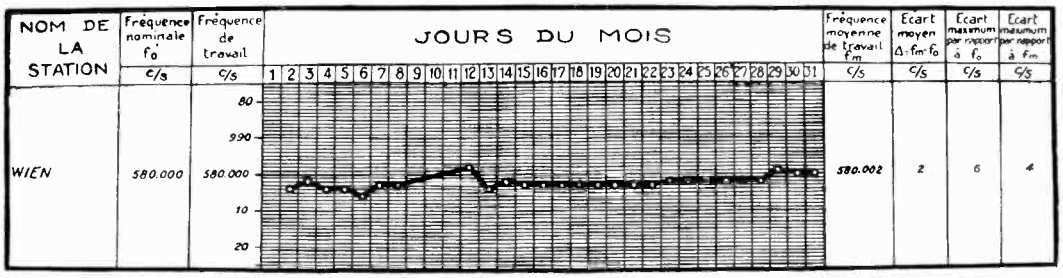

Fig. 8.

U.I.R. frequency measurements of Vienna Broadcasting Station during August (Fig. 6), *September* (Fig. 7) *and October* (Fig. 8), 1933.

Finally we will discuss the constancy of frequency obtained with this equipment. Fluctuations of frequency due to anode- and heating-voltage variations, and frequency changes occurring when valves are replaced, are smaller than 2.10^{-6}. Investigations have shown that frequency variations caused by external vibrations reaching the quartz are of a smaller order of magnitude thanks to the special mounting. The constancy of temperature arrived at with the control equipment described is about 1/20th of a degree C. For a quartz temperature coefficient of 20.10^{-6} the resulting frequency variations due to temperature fluctuation are less than 1.10^{-6}. It may therefore be expected that the total frequency variations of the transmitter will remain under 3.10^{-6}. Figs. 6, 7 and 8 show the frequency measurements of the Vienna station carried out by the U.I.R. in Brussels in August, September and October. It is to be noted that the U.I.R. give the accuracy of measurement, at the frequency in question, as from 3 to 4 cycles per second; that is, about 5.10^{-6}. It is seen that the measured frequency variations lie within the error of observation. If, however, when several series of measurements, with a large number of readings, are taken the maximum deviation evident in each series is equal to the known error of observation, and, moreover, the mean values of the various series are equal, it follows that the fluctuations of the frequency under measurement are small compared with the errors of observation. If that were not the case one would expect to find among the large number of observed points some having a maximum deviation equal to the sum of the fluctuation of the quantity being measured and the maximum error of observation; but no such deviation, larger than the error of observation, is found. The frequency fluctuations of the transmitter are, in any case, distinctly smaller than 5.10^{-6}, as predicted above. Further, the high *absolute* frequency accuracy may be pointed out; this amounts to 5 cycles per second, that is, for the wavelength in question, $0.9.10^{-5}$. This high absolute accuracy is attained by the fine adjustment of the working temperature of the quartz, described above.

Correspondence

Letters of technical interest are always welcome. In publishing such communications the Editors do not necessarily endorse any technical or general statements which they may contain.

Demodulation

To the Editor, The Wireless Engineer

SIR,—The controversy regarding the word "demodulation" calls attention to one more case of many where words have different meanings in the English and American languages.

The Americans first used the words "demodulator" and "demodulation" to replace the words "detector" and "detection," and it is rather difficult to me to find any good reason why the latter are so inadequate and why the new words are so much better.

Professor Howe has pointed out that the word "demodulation" as used in America is incorrect, for, as he says, "when you extract an envelope from a modulated carrier, you 'de-carrier' the wave and not 'demodulate' it." In English wireless circles not attracted by American parlance, the words "detector" and "detection" have been adhered to, and when the phenomenon of the demodulation of a modulated wave was observed, either because of passage through an ionised medium, or because of interference with other waves, the word "demodulation" assumed a natural meaning. Therefore, let America use the word as she chooses, but in England we may as well attribute to the word the meaning which appears to be natural, and for which there is a use.

Your last correspondent, Mr. C. B. Fisher, gives what he calls "pertinent reasons" for the universal adoption of the American usage but he has not made out any real case.

Firstly he gives no reasons why the words "detector" and "detection" require replacing. If the word had been brought in to indicate a definite type of detector such, for instance, that detector where the intelligence is extracted, as distinct from other detectors at frequency changing points, one might have some sympathy for a word which gave us specific information; it is, however, used quite indiscriminately.

Secondly, although we may not question the right of Americans to give whatever odd meaning they choose for a word (they often do), or manufacture any words they like, it surely does not follow that the English speaking world need follow them.

Mr. Fisher's example is quaint. He says "when we 'decapitate' we *produce* a head and a body."

Can one produce a thing that already exists? It is more usual to consider that when we decapitate a person, he loses his head.

As to the question of priority, I think the less he says about this the better. How many English words are adopted by America to mean something entirely different?

Finally, Mr. Fisher does not think the other use of the word for a phenomenon, to which he cannot give a name apparently, is of interest. If he had followed the extensive discussion of the demodulation phenomenon in the various scientific journals, he might pause before denying the need for expression of an important phenomenon in a simple way.

Danbury. A. W. LADNER.

Some Applications of an A.C. Valve Bridge

To the Editor, The Wireless Engineer

SIR,—I find that, in my article on "Some Applications of an A.C. Valve Bridge" (*W.E. & E.W.*, April, 1934), I inadvertently omitted to emphasise the following point. On page 176 I stated that, in the case of the balanced H.F. bridge, the carrier is obtained when the modulating signal is introduced. This statement is meant to apply only to those bridges which have a characteristic similar to the one given in Fig. 4, in which the portions *PQ* and *PR* have different slopes. Given this condition, it follows that the 180° phase difference between the currents produced by the respective positive and negative half-cycles of the modulating voltage will not result in the complete neutralisation of the carrier. In a bridge where the portions corresponding to *PQ* and *PR* have the same slope, complete neutralisation of the carrier is effected (assuming that the linearity condition is satisfied), and, as in the case of any other suppressed carrier system, only the side-bands are transmitted.

M. REED.

A New Property of the Ear?

To the Editor, The Wireless Engineer

SIR,—When the intensity of a pure tone of fixed frequency is increased the pitch becomes flatter—a curious phenomenon which may be observed quite easily when one listens to a 'cello solo as reproduced by a wireless receiving set fitted with a volume control.

Dr. Vrijdaghs, in a letter published last month in these columns, contributes further evidence of this kind, and finds that the pitch may be flattened by as much as three semitones for notes above 350 c.p.s., while for lower frequencies a sharpening may occur. This *rise* in pitch has not, to my knowledge, been observed before, but the *drop* in pitch has been recorded by Zurmuhl and other investigators, whose results are in general similar to those of Dr. Vrijdaghs.

I have given an account of this phenomenon in my book *Hearing in Man and Animals* (G. Bell and Sons), with an explanation based on the behaviour of a stretched string when plucked; the note given out when the amplitude of vibration is large is of slightly higher frequency than the note corresponding to a small amplitude, the reason being that at large amplitudes the average tension of the string is greater and so the frequency goes up. Applying this reasoning to the ear strings in the cochlea, we see that when they are vibrating strongly under the influence of a loud C their natural frequencies may rise, so that the C string may resonate to C sharp and the B string to C. If this is so, the sensation of pitch will be given by the string which vibrates most strongly, i.e., the B string, so that the pitch will appear to drop by a semitone.

This explanation also accounts for the experimental result that at high frequencies the drop in pitch is small, but does not cover the *rise* in pitch observed by Dr. Vrijdaghs at very low frequencies.

R. T. BEATTY.

To the Editor, The Wireless Engineer.

SIR,—Referring to the letter of Dr. J. J. H. Vrijdaghs—A New Property of the Ear?—published in your April issue, page 196, I want to draw attention to the following:

The phenomenon, that a pure tone of the middle frequency-range acts in hearing so as to lower the actual pitch, supposing an increase in the sound intensity, is well known in psychology. As early as 1828, *Wilhelm Weber* makes mention of the fact (*Poggendorf*, Annalen 14, p. 397, 1828), that the tone of a fading tuning-fork rises. This was also recorded by *E. Mach*, Sitzungsbericht der Akademie der Wissenschaften, Wien, Math.-naturw. Kl. 50, 2 Abt. p. 342, *Pogg*, Ann. Vol. 126, p. 342, 1865, and by *C. Stumpf*, Tonpsychologie, Band I, p. 236, 1883.

Lately the very same effect has been dealt with by *G. Zurmühl*, Zeitschrift für Sinnesphysiologie, Vol. 61, p. 40, 1930. His work is mentioned in *R. T. Beatty's* book: Hearing in Man and Animals, London, 1932, p. 115. The connection of this phenomenon with the theory of hearing was explained by *Zurmühl*. In his work is also to be found a bibliography of the literature on that matter. GEORG V. BÉKÉSY.

Budapest, Hungary.

The Industry

MARCONI and Osram midget valves, with filaments rated at 1 volt 0.1 amp, have recently been introduced. Two types (both triodes) are already available; overall diameter is only 25 mm. and length 53 mm. Rubber insulated bases with special contacts are fitted.

The General Inductance Co., of 28–34, Fortess Road, London, N.W.5, has issued a leaflet describing the properties of their bakelised paper tubes for coil formers. With the object of facilitating the manufacture of closely matched coils, formers to exact diameter can be supplied.

We are informed that W. Andrew Bryce & Co., Woodfield Works, Bury, Lancs., have acquired the business of "Peak" condensers and terminal blocks formerly conducted by Wilburn & Co.

The Reception of Wireless Signals in Naval Ships

Paper by Dr. W. F. Rawlinson, A.M.I.E.E., read before the Wireless Section I.E.E., on March 7th, 1934

Abstract

THE paper discusses the difficulties in the reception of wireless signals in naval ships, and describes apparatus which has been developed to overcome these difficulties and fulfil the stringent requirements of service under sea-going conditions.

In a warship the choice of receiving aerials is exceedingly limited. In large ships the central receiving room is well below armour and the distance between it and the foot of the aerials may be up to 100ft. The aerial itself terminates in a deck insulator and junction box from which a special paper/air insulated cable is run to the office.

Three types of valves have been adopted for naval use—a screened-grid valve for h.f. amplification, a general purpose valve for detection and note magnification and a power valve for use as an oscillator or for larger output.

The requirements of service at sea result in very wide frequency ranges being covered by each receiver, the least being 10 to 1 and the greatest 30 to 1 for normal models, while for one particular receiver it is 1,333 to 1. One of the fundamental points in all types is the question of selectivity. This is generally in the form of receiving a weak C.W. or I.C.W. signal in the presence of a much more powerful signal transmitted by the receiving ship or other near station, the two signals being, in general, fairly well separated in frequency. It is shown that for this requirement it is better to use two fairly loosely coupled circuits than to attempt to design and operate a single circuit of the lowest decrement that can be obtained by reaction. In addition, the coupled circuits are followed by tuned intervalve stages which add still more to the selectivity.

The paper then proceeds to a detailed description of various receivers.

Short-wave Receiver.—This covers 1,500–23,000 kc, providing for long-range working in the band 6,000–23,000 kc and short-range working in the band 1,500–6,000 kc. Its circuit is shown in Fig. 5.*

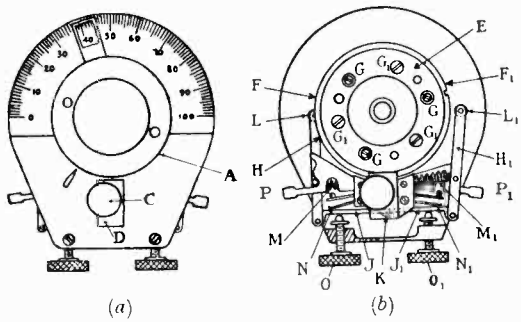

Fig. 7.—(*a*) *Receiver condenser dial ;* (*b*) *with covers, etc., removed.*

The aerial circuit is untuned, a plug connection permitting the aerial to be connected to either h.f. valve. The whole range of frequencies is covered by sets of plug-in coils. The actual coupling between l.f. stages is by means of choke-capacity. The chokes have an inductance of 10 H and are wound on closed iron cores, shielded by iron and copper cases. The chokes also perform the function of telephone transformers, each choke having a secondary winding of ratio $6\frac{1}{2}:1$.

The condenser dials of this receiver are interesting since they must allow for the following requirements :—(*a*) quick search over the whole scale ; (*b*) slow-motion control ; (*c*) instantaneous setting to either of two predetermined readings ; (*d*) slow-

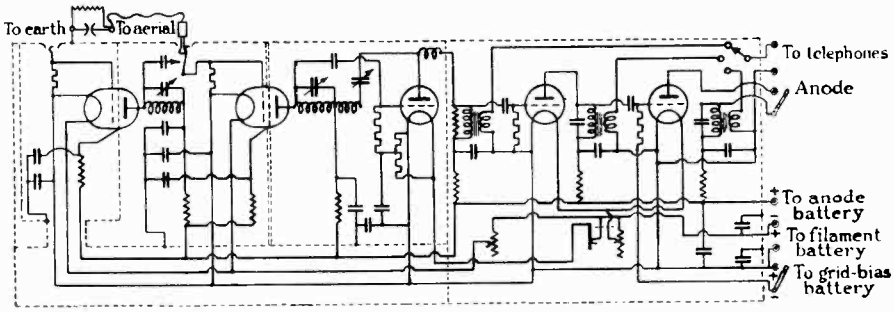

Fig. 5.—*High-frequency receiver.*

* The author's original figure-numbers are adhered to throughout.

motion control at either of these settings without disturbing the other. A dial designed to meet these conditions is illustrated in Fig. 7, and its operation is described in detail in the paper.

Medium-frequency Receiver.—This covers 150–1,500 kc; both high selectivity and high amplification are required, with quick wave-changing.

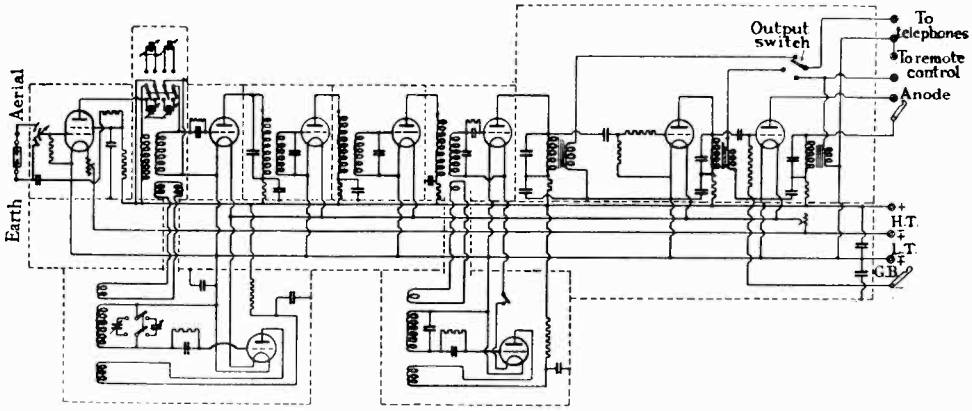

Fig. 8.—*Medium-frequency receiver.*

The super-heterodyne principle is therefore used, as shown in Fig. 8. The primary and secondary tuning condensers are ganged. Both tuner and first oscillator cover the frequency range in four steps and the range switches for both are gang controlled. Two tuning dials and two heterodyne oscillator dials are fitted. Only one tuning dial and one heterodyne dial are used in tuning-in one signal, but it is possible by means of a change-over switch to use either of the two alternative sets of dials.

Long-Wave Receiver.—This covers the range 15–550 kc and is in three separate units. The tuner unit is shown in Fig. 11, being of 2-circuit type with primary and secondary in separate screened compartments. "Stand-by" or "tune" switching is provided; in the former position only the tuned aerial circuit is in use; in the latter both circuits are in use, capacity coupled. The radio-frequency amplifier is shown in Fig. 13, the various stages being coupled by tuned-grid transformers. A heterodyne oscillator is included, designed to give approximately constant heterodyne strength on all ranges. The note magnifier is illustrated in Fig. 14. It is in two compartments, the left-hand portion containing an aerial isolating unit which really forms part of the tuner circuit but was placed in its present position in the note magnifier merely from considerations of space.

Stand-by Receiver.—A stand-by receiver is required to provide an alternative to any line in event of a breakdown. It is capable of receiving signals throughout the band of 15–20,000 kc, essential features being simplicity of design so that it is unlikely to develop any defects in itself, with ease and rapidity of tuning. It therefore consists of a detector with variable reaction followed by two stages of note magnification, as shown in Fig. 15.

Non-directional Receiver using Crossed Frame Coils.—This receiver has been designed to meet the requirements of non-directional reception in cases where space only allows frame aerials to be used. Normally, two crossed frame aerials behave as a single frame, but it is shown that, by appropriate phasing between the two frames, rotation of the frames (about a vertical axis) can be made to result in a signal of constant amplitude, but of continuously changing phase. So far as amplitude is concerned, however, the two frame coils at right angles can be made to behave as a non-directional aerial system. The method is illustrated in Fig. 17, where A and B are crossed frames feeding into similar valves V_1 and V_2. The couplings between V_1 and V_3 and between V_2 and V_4 are such as to give $\pi/2$ phase difference between the voltages at the grids of V_2 and V_4, these being then combined to give a signal whose amplitude, as stated, remains constant for any direction of incoming signal. The performance of the receiver is illustrated in the paper.

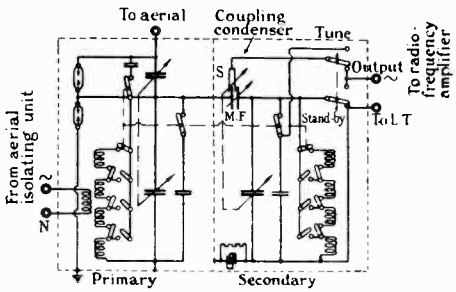

Fig. 11.—*Internal connections of low-frequency tuner.*

Receiver Power Supplies.—The last part of the paper deals with the supply voltages. Anode and filament voltages for all the receivers in an office are supplied from common sources of 100 v and 4 v. Where a large number of receivers is to be run from a common source a battery has advan-

tages, but various types of generator supplies have been tried out and a system of a.c. supply has been adopted in some special cases.

Naval ships are not in general fitted with alternators and a separate small motor-alternator is necessary to overcome the difficulties of regulation which arise from variations of input voltage and variations of load. The system adopted is described and the regulation illustrated by means of oscillograph tracings. The rectifier and smoothing systems are also illustrated.

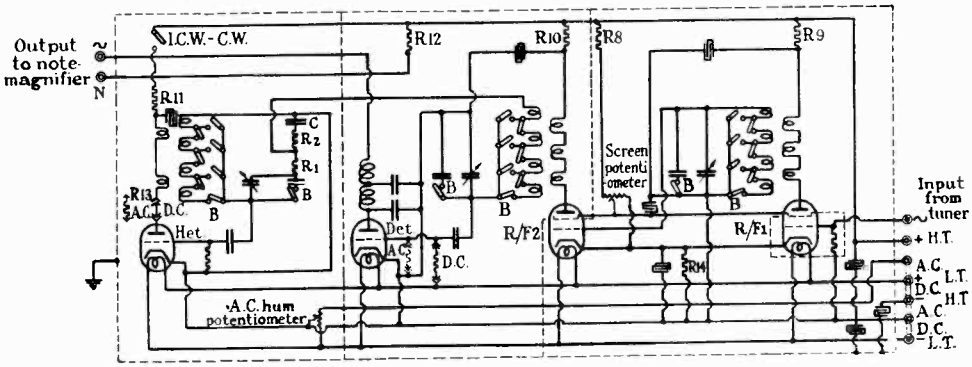

Fig. 13.—*Internal connections of radio-frequency amplifier.*

Discussion

In opening the discussion, CAPT. A. L. MURRAY, R.N., referred to the Service difficulties of naval wireless. This was also discussed by COMMDR. J. A. SLEE, who referred to the early difficulties of multiple reception and to the technical improvements described in the paper.

MR. S. P. SMITH raised a few points on the cable feed system, in comparison with mercantile marine practice. In this practice the limit of reception was set by the radio level and not by the noise-level and he sought information as to the noise-level in H.M. ships on various wavelengths. The arrangements described did not appear suitable for duplex working and he sought additional information on this in relation to medium and long waves.

MR. M. M. REED also referred to practice in mercantile wireless and described, with slides, methods of multiple reception on one aerial, an alternative method of controlling note-magnifier selectivity and a system of uniform reaction over a wide wave-band.

MR. R. W. MINTER referred to the position of the main W.T. room and asked could not air-spaced trunks be used? He also queried the possibility of adding a cardioid polar curve to the non-directional frame system to obtain directional selectivity if required.

MR. F. S. BARTON asked for data of the slot-wound coils described by the author and suggested the use of an l.f. gain-control instead of stage-switching.

DR. L. E. C. HUGHES suggested the use of transformers and matched transmission lines instead of the feed system used.

MR. L. B. TURNER briefly referred to the arrangements of aperiodic aerials, and to the advantages of the two-stage selectivity.

MR. A. J. GILL referred to the power supply arrangements, suggesting the use of Tyrrell regu-

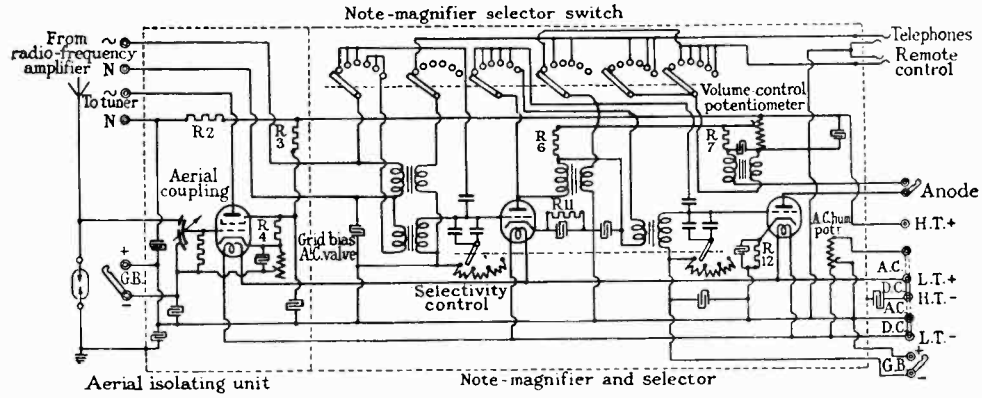

Fig. 14.—*Internal connections of note magnifier.*

lators and describing a regulating system which had been employed in a P.O. station, feeding the rectified d.c. back into an extra field winding.

MR. L. BAINBRIDGE-BELL pointed out that the crossed-coil non-directional aerial system was a method of determining the polarisation of down-coming signals and suggested that in certain circumstances zero signal might be received unless a reversing switch was used in one aerial. MR. R. A. WATSON WATT pointed out, however, that in certain conditions this might lead to anti-fading reception, for example, when phase-fading was occurring due to magneto-ionic splitting. Insensitivity to one sense of polarisation might leave the other of much more constant reception-strength.

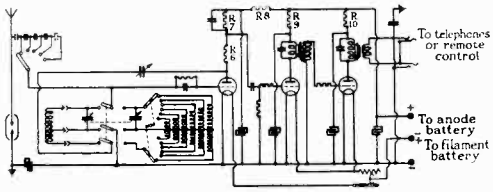

Fig. 15.—*Stand-by receiver.*

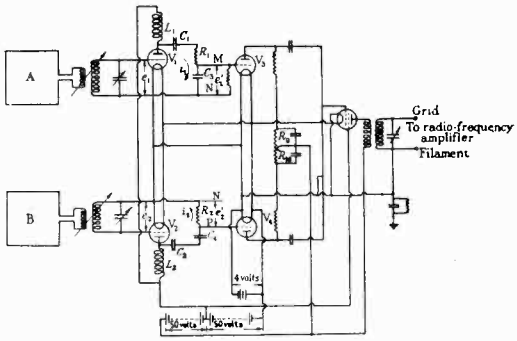

Fig. 17.—*Phasing receiver.*

After the discussion MR. W. E. BENHAM gave a demonstration of an electron microscope, a cathode-ray tube device in which an "electrical lens" system gives on the fluorescent screen a greatly magnified image of the structure of the cathode surface. The method has been used in Germany for the study of cathodes.

New Books

Principles of Radio

By KEITH HENNEY, M.A.

Second Edition, 491 pp. + xii. John Wiley and Sons Inc., New York, and Chapman and Hall Ltd., 11, Henrietta Street, London, W.C.2. 21s. 6d.

This is essentially a book for the student who is not deeply versed in mathematics, being of a non-mathematical character but nevertheless very complete. The first few chapters are devoted to the elements of electricity and magnetism and the properties of circuits in general. The major portion of the book deals in a very clear and instructive manner with valves and valve circuits, their performance being well illustrated by numerous curves and diagrams.

Although the diagrams are well produced on the whole there are one or two instances where sine waves and resonance curves might have been drawn more carefully for a book of such merit. The worst case is in Fig. 85 where what should be a sine curve of instantaneous power is shown as a pointed curve.

The text is interspersed throughout with worked examples, and numerous simple problems of a practical nature are set for the student to solve. The style of writing is characterised by preciseness and clearness of statement, but there are a few isolated statements which are not beyond criticism. On page 81 for instance: "The time it takes a condenser to discharge . . . is known as its time constant"; and on page 338: "If such a modulated wave is turned into a demodulator, the *side band frequencies* can be got back." The *italics* are introduced by the reviewer.

The final chapter is devoted to facsimile transmission and television and two useful tables are given at the end of the book, which takes its place in the front rank among elementary text books on radio communication. It is highly recommended.

O. P.

Physics of Electron Tubes

By L. R. KOLLER, Ph.D.

Pp. 205 with 66 diagrams and illustrations. Published by McGraw-Hill Book Co. Inc., New York, and McGraw-Hill Publishing Co. Ltd., Aldwych House, London, W.C.2. Price 18s.

The author has produced a book which will be of great interest to all engineers who wish to understand what happens inside such electron tubes as thermionic valves, gas discharge tubes, and photo-electric cells. External circuit arrangement and theory are not considered.

The book is very thorough in its survey of recent work in this large field. It is concise and clear in its methods, the diagrams are good, the tables and curves give exact information, and numerous references provide for the student who wishes to read further. The demands made on the knowledge of physics of the reader are a minimum.

Thermionic emission and emitters, thorium and oxide-coated cathodes, caesium and secondary emission, with notes on the particular happenings in triodes, dynatrons and magnetrons, determination of temperature, "getters" and clean-up of gases, space charge, discharges in gases, grid-controlled arcs, photo-electricity, photo-conductivity, and photovoltaic effect are chapter headings which show clearly the scope of the work. The mathematical derivation of important equations together with a useful table of constants, and problems and their solutions, are given in appendices.

Altogether, a very valuable book. E. M.

Abstracts and References

Compiled by the Radio Research Board and reproduced by arrangement with the Department of Scientific and Industrial Research.

	PAGE
Propagation of Waves	259
Atmospherics and Atmospheric Electricity	261
Properties of Circuits	264
Transmission	265
Reception	266
Aerials and Aerial Systems	269
Valves and Thermionics	269
Directional Wireless	270
Acoustics and Audio-Frequencies	271
Phototelegraphy and Television	273
Measurements and Standards	277
Subsidiary Apparatus and Materials	279
Stations, Design and Operation	282
General Physical Articles	283
Miscellaneous	283

PROPAGATION OF WAVES

VORLÄUFIGE ERGEBNISSE DER FUNKTECHNISCHEN EXPEDITION DER HEINRICH-HERTZ-GESELLSCHAFT NACH TROMSÖ, NORWEGEN (Preliminary Results of the Wireless Expedition of the Heinrich Hertz Society to Tromsö, Norway).—K. W. Wagner. (*Sitzungsber. der preuss. Akad. der Wiss., phys.-math. Klasse.*, 1933, Vol. 32, pp. 1–16: *E.N.T.*, February, 1934, Vol. 11, No. 2, pp. 37–50.)

For a report on Wagner's address (with film demonstration) to the Society, *see* March Abstracts, p. 143. This preliminary account describes the work of the German expedition to Tromsö for radiotelegraphic observations in polar latitudes during the Polar Year 1932/33. A general account of the history, ideas and methods of ionospheric investigations is first given. The three chief items on the programme of the German expedition were (1) photoelectric measurement and registration of the brightness of the aurora; (2) registration of field strength and directional fluctuations of European broadcasting stations; and (3) further development and application of the German method of registration of wireless echoes.

As regards (1), it was found that the field strengths of broadcasting stations show a strong decrease occurring simultaneously with aurora onset; the field strength gradually recovers when the aurora has died away. Observations on broadcasting stations were made by using two vertical frames set at right angles to one another and connected through two equal amplifiers to the field coils of a recording milliammeter. The deflection of the milliammeter gave the direction of the station, and it was arranged that the voltage on one of the receivers should be directly recorded, giving a measurement of field strength. The emitters of the English expedition were placed at the disposal of the German observers for the continuous recording of apparent heights. The method of recording employed permitted simultaneous recording of layer height and echo strength (*cf.* Hollmann and Kreielsheimer, Abstracts, January, p. 29). Examples of the records obtained are given. The disappearance of echoes during auroras and magnetic storms, noted by the English observers (*cf.* Appleton, Naismith and Builder, 1933, p. 613), was also found by the German expedition.

A diagram is given showing a comparison of the radiotelegraphic observations during the first six months of 1933 with the variations in the earth's magnetic field. This varied in the opposite way to echo strength, intensity of broadcast reception and magnitude of directional fluctuation. The effect of the gradually increasing intensity of the solar ultra-violet radiation is also shown by the field-strength record.

ÜBER DIE ENTFERNTEN RAUMWELLEN EINES VERTIKALEN DIPOLSENDERS OBERHALB EINER EBENEN ERDE VON BELIEBIGER DIELEKTRIZITÄTSKONSTANTE UND BELIEBIGER LEITFÄHIGKEIT (The Distant Space Waves from a Vertical Dipole above a Plane Earth of Arbitrary Dielectric Constant and Conductivity).—K. F. Niessen. (*Ann. der Physik*, 1933, Series 5, Vol. 18, No. 8, pp. 893–912.)

For reference to former work on a similar subject by the writer and van der Pol *see* 1932 Abstracts, p. 87. The present paper discusses the case of an earth no longer perfectly conducting but with arbitrary electromagnetic constants. The angle of elevation of the rays emitted by the dipole is, however, definitely not grazing. The principle of the mathematical method used is an integration over the earth's surface, radiation from all points of which contributes to the field in the air on lines similar to those of Huyghens' principle in optics. The derivation of the formula giving the reflection from the earth's surface is based on Green's theorem, and geometrical methods of approximation are used which give the region of validity of the formula. When the dipole is *on* the earth's surface, the potential function $\Pi_0(r, z)$ (r, ϕ and z being cylindrical co-ordinates) is given by $M\,(1 + \mathfrak{R}_\phi)\dfrac{e^{jk_1 R}}{R}$ where M is the dipole moment, R the distance of the point of observation from the dipole,

$$k_1^2 = \frac{\epsilon\omega^2 + j\omega\sigma_1}{c^2}$$

(usual Sommerfeld notation) and $\mathfrak{R}_\phi$ is the known Fresnel reflection coefficient for plane waves of angle of incidence $\frac{\pi}{2} - \phi$. When the dipole is at distance z_s above the earth's surface the formula

for the potential above the earth becomes

$$M\frac{e^{jk_1 R_1}}{R_1} + M\frac{e^{jk_1 R_2}}{R_2}\mathfrak{R}_\phi,$$

where R_1 now denotes the distance of the point of observation from the dipole and R_2 its distance from the image of the dipole in the earth's surface.

This formula has been derived by other methods by H. Weyl (*Ann. der Physik*, 1919, Vol. 60, p. 481) and T. L. Eckersley (1927 Abstracts, p. 571), but they do not discuss the region of validity of the formula; the present writer gives a correcting term which he deduces by complex integration from the second approximation to the potential function. He finally works out some numerical examples for the magnitudes of the correcting term.

ELIMINATION OF NIGHT EFFECT WITH A PULSE TRANSMITTER [and the Occurrence in England of Reflected Rays with Right-Hand Circular Polarisation].—Eckersley. (*See* under "Directional Wireless.")

INTERACTION OF RADIO WAVES [More Luxembourg Results].—(*World-Radio*, 9th March, 1934, Vol. 18, No. 450, p. 353.) *See* April Abstracts, p. 199, l-h column.

PROGRESS REPORT ON KENNELLY-HEAVISIDE LAYER MEASUREMENTS.—H. R. Mimno and P. H. Wang. (*Phys. Review*, 15th Feb. 1934, Series 2, Vol. 45, No. 4, pp. 291–292: abstract only.)

The automatic recording devices used by the writers have been dealt with in 1933 Abstracts, p. 386. 6 000 hours' recording was done in 1933, largely on two frequencies simultaneously [the frequencies are not given]. Curves indicating the degree of correlation between magnetic disturbances and layer heights have been plotted, and the effect of magnetic disturbances in determining the hour at which penetration [presumably of F layer by the constant frequency employed] occurs has been examined. Abnormal early morning appearances of E layer have been noted, but no support is found for the view that they may result from magnetic disturbances or from local storm conditions.

ULTRA-RADIATION LAYER AROUND 25 KILOMETRES, AFFECTING LONG-WAVE PROPAGATION.—Lenz. (*See* abstract under "Atmospherics and Atmospheric Electricity.")

ELECTROMAGNETIC WAVES OF 1.1 CM WAVELENGTH [Produced by Magnetron Oscillator: Measured by Spectrometer with Echelette Grating] AND THE ABSORPTION SPECTRUM OF AMMONIA.—C. E. Cleeton and N. H. Williams. (*Phys. Review*, 15th Feb. 1934, Series 2, Vol. 45, No. 4, pp. 234–237.) *See* also under "Miscellaneous."

STUDY OF THE ATMOSPHERIC OZONE ON THE PIC DU MIDI BY DIRECT MEASUREMENTS ON THE SUN DOWN TO HORIZON LEVEL.—J. Gauzit. (*Comptes Rendus*, 29th Jan. 1934, Vol. 198, No. 5, pp. 492–494.)

For previous papers *see* 1933 Abstracts, pp. 92 and 560. The writer now announces the observation, on certain days, of a marked and regular increase of the optical density of ozone from $m = 20$ or 25 (m = mass of air traversed, taking the value in the vertical direction as unity) down to the horizon. "This increase is in contradiction with the hypothesis of a simple high layer of ozone, which would give a much smaller density variation; whatever altitude were assumed for this layer, it would be impossible to explain the results. A simple hypothesis consists in attributing a double distribution to the atmospheric ozone: on the one hand a thin elevated layer, on the other a mass disseminated throughout the whole atmosphere and proportional to the mass of air traversed."

THEORETICAL REMARKS ON THE DISTRIBUTION OF OZONE IN THE ATMOSPHERE.—D. Barbier: Gauzit. (*Comptes Rendus*, 12th March, 1934, Vol. 198, No. 11, pp. 1060–1062.)

Previous ozone measurements have conformed with the formula

$$N(\phi) = \epsilon D/\sqrt{D^2 - R^2 \sin^2 \phi},$$

where the left-hand term is the total quantity of ozone traversed by a ray from the sun at a zenithal distance ϕ, ϵ being the total quantity of ozone, which is supposed to be concentrated in a thin layer at a distance D from the centre of the earth (of radius R). Gauzit's observations, however, do not so conform (*see* preceding abstract). The present writer has established a method of determining approximate solutions of the Fabry-Buisson equation, on which the method of estimation is based, for cases where the above formula is not satisfied. In applying his method to Gauzit's results, he rejects the latter's interpretation introducing a second layer ("according to this scheme the quantity of ozone should diminish as one rises in the atmosphere, which is contrary to reality") and prefers to use a continuous distribution limited to its first term. The writer concludes that the dispersion of the ozone is quite great and increases as the mean altitude of the distribution increases; the distribution would appear strongly dissymmetrical, the more so the higher its mean altitude. The method of Cabannes and Dufay [spectrum of night sky? *cf.* next abstract] has also been examined theoretically, and it seems possible in this case to determine σ, or at any rate the relation between σ and the mean height of distribution.

SPECTRUM ANALYSIS OF THE LIGHT OF THE NIGHT SKY AT THE PIC DU MIDI [Altitude of Luminous Layers more than 100 km, greater than That of Most Auroras].—J. Cabannes and J. Dufay. (*Comptes Rendus*, 22nd Jan. 1934, Vol. 198, No. 4, pp. 306–309.)

SCIENTIFIC FINDINGS OF SOVIET STRATOSTAT "USSR" CONTRADICT THEORETICAL CALCULATIONS: OXYGEN CONTENT AT 19 KM NEARLY SAME AS AT SURFACE.—A. Wangenheim. (*Science*, 23rd Feb. 1934, Vol. 79, No. 2043, Supp. p. 6.)

THE TRAVEL OF WIRELESS WAVES [Kelvin Lecture].—F. E. Smith. (*Journ. I.E.E.*, December, 1933, Vol. 73, No. 444, pp. 574–590.) The full paper, a summary of which was referred to in 1933 Abstracts, p. 382.

ON THE PROPAGATION OF ENERGY IN TUBES OF IONISED GAS [Calculation of Velocity from $\sqrt{LC}$ Formula: Methods of deriving Values for L and C: Experimental Results].—Th. V. Jonescu. (*Comptes Rendus*, 22nd Jan. 1934, Vol. 198, No. 4, pp. 353–355.) Further development of the work dealt with in Abstracts, 1931, p. 315. *See* also 1932, p. 157, and elsewhere.

INFLUENCE OF INSULATED CONDUCTORS ON THE CORONA DISCHARGE.—M. Pauthenier and M. Moreau-Hanot. (*Comptes Rendus*, 22nd Jan. 1934, Vol. 198, No. 4, pp. 351–353.)

THE POLARISATION OF LIGHT AT SEA.—E. O. Hulburt. (*Journ. Opt. Soc. Am.*, February, 1934, Vol. 24, No. 2, pp. 35–42.)

ON THE PARTICLES WHICH CAN BE ASSOCIATED WITH THE PROPAGATION OF A LIGHT WAVE.—Al. Proca. (*Comptes Rendus*, 12th Feb. 1934, Vol. 198, No. 7, pp. 643–645.)

ÜBER DIE HAUTWIRKUNG IN FERROMAGNETISCHEN KREISZYLINDERN BEI SCHWACHEN WECHSELFELDERN (The Skin Effect in Ferromagnetic Circular Cylinders for Weak Alternating Fields [Theoretical Investigation taking Account of Dependence of Permeability on Field Strength and Hysteresis Losses]).—E. Hinze. (*Ann. der Physik*, 1934, Series 5. Vol. 19, No. 2, pp. 143–154.)

EXPERIMENTS ON THE DIFFRACTION OF LIGHT BY SUPERSONIC WAVES [leading to a Method of Measuring the Velocity of the Latter].—P. Debye, H. Sack and F. Coulon. (*Comptes Rendus*, 5th March, 1934, Vol. 198, No. 10, pp. 922–924.) For past papers *see* Abstracts, 1933, p. 167, r-h column; also February, p. 100, Biquard: *cf.* also Bachem and others, under "Acoustics and Audio-frequencies."

WELLENAUSBREITUNG IN KRISTALLGITTERN (Wave Propagation in Crystal Lattices [Theoretical Investigation of Anomalous Dispersion on Basis of Maxwell's Equations and Schrödinger's Equation for Electron Waves]).—K. Försterling. (*Ann. der Physik*, February, 1934, Series 5, Vol. 19, No. 3, pp. 261–289.)

TWO TYPES OF SEISMIC WAVE BETWEEN THE S AND L WAVES: THE SL AND SM WAVES.—P. Caloi. (*La Ricerca Scient.*, 31st Jan. 1934, 5th Year, Vol. 1, No. 2, pp. 90–94 and Plate.)

ATMOSPHERICS AND ATMOSPHERIC ELECTRICITY

DIRECTION DES SOURCES ESTIVALES D'ATMOSPHÉRIQUES (Direction of the "Summer" Sources of Atmospherics).—R. Bureau. (*Comptes Rendus*, 12th March, 1934, Vol. 198, No. 11, pp. 1057–1059.)

By "æstival" atmospherics the writer denotes the short-range and often violent type which abound chiefly in the summer, with only a vague relation between direction and times, as distinguished from the "nocturnal" atmospherics which show themselves practically all the year round in regular directions at regular hours. The present paper deals with records obtained during 1933 at St. Cyr, on a wave of 11 000 m. The writer divides the "summer" sources into three classes according to their diurnal variation:—(a) Periodic sources (maximum in the afternoon) of direction practically fixed in the course of one day: this direction coincides with that of the meteorological disturbances which have acquired a stormy character on the continent, but from which atmospherics have not previously appeared. "Almost all the periodic sources are found to the east of the line NE–SW (Fig. 1)." (b) Sources showing no regular diurnal periodicity and of rapidly varying direction. They accompany the meteorological disturbances of the cold-front type, of which they announce the passage from west to east, either by the north or by the south (Fig. 2). (c) Sources intermediate in character between (a) and (b).

The writer continues:—"Thus certain sources require, for their development, the simultaneous influence of the meteorological disturbance, the continent, and the hour (case a). Others are closely bound to the meteorological disturbance and move rapidly with it (case b) whatever the hour and whatever the course, land or sea. This confirms my earlier proposed classification into stagnant (case a) and migratory (case b) atmospherics, the third category in this classification ('nocturnal' atmospherics) corresponding to the distant sources." The spiral 24-hour record shown in Fig. 1 shows the two regular "nocturnal" sources, the African at the beginning of the night, in the SSW, and the American at the end, in the WNW; the two chief groups of European "æstival" sources are seen towards the E and ENE. In Fig. 2 the sources without diurnal variation are in rapid rotation from the WSW to NE by way of N.

MAINTENANCE OF THE EARTH'S ELECTRICAL CHARGE BY ELECTRICAL RECTIFICATION IN THE EARTH'S LOWER ATMOSPHERE.—R. Gunn. (*Phys. Review*, 15th Feb. 1934, Series 2, Vol. 45, No. 4, p. 291: abstract only.)

"The relation of the current density to the impressed electric field intensity is worked out for the earth's atmosphere, taking account of space charge . . . the large random alternating electric fields of the type observed during storms will result in a net upward transfer of electricity which may leak off over a large area and contribute to or account for the entire normal or fair weather electric field." Only radially inward atmospheric electric fields can be stable.

ON THE MEASUREMENT OF THE EARTH'S ELECTRIC FIELD AND OF ITS VARIATIONS [even the Rapid Variations].—G. Grenet. (*Comptes Rendus*, 5th March, 1934, Vol. 198, No. 10, pp. 967–968.)

ON THE NATURE OF THE PHOTOSPHERE AND THE ELECTRONIC EMISSION FROM THE SUN.—A. Dauvillier. (*Comptes Rendus*, 5th March, 1934, Vol. 198, No. 10, pp. 902–904.)

PROGRESSIVE LIGHTNING [Analysis of Photographs taken with the Boys Camera].—B. F. J. Schonland and H. Collens. (*Proc. Roy. Soc.*, 1st Feb. 1934, Vol. 193, No. A 850, pp. 654–674.) The full paper, a summary of which was dealt with in March Abstracts, pp. 144–145.

THE BRANCHING OF LIGHTNING AND THE POLARITY OF THUNDERCLOUDS.—J. C. Jensen. (*Phys. Review*, 15th Feb. 1934, Series 2, Vol. 45, No. 4, p. 296: abstract only.) The full paper was dealt with in March Abstracts, p. 145.

THE VARIATIONS OF THE CONDUCTIVITY OF THE AIR IN THE GROTTOES [of Aveyron and elsewhere: High Values and Consequent Attraction of Lightning Strokes].—C. Dauzère and J. Bouget. (*Comptes Rendus*, 29th Jan. 1934, Vol. 198, No. 5, pp. 490–492). *See* also February Abstracts, p. 87, l-h column.

ARGUMENT AS TO THE SLOW DISCHARGE FROM A LIGHTNING ROD DECREASING THE PROBABILITY OF A DIRECT STROKE.—J. B. Whitehead: M. G. Lloyd. (*Science*, 23rd Feb. 1934, Vol. 79, No. 2043, p. 183: in a correspondence on Protection for Trees.)

THE COUNTERPOISE [Factors affecting Action in reducing Lightning Outages on Transmission Systems].—L. V. Bewley. (*Gen. Elec. Review*, February, 1934, Vol. 37, No. 2, pp. 73–81.)

STRUKTUR VON FUNKENTLADUNGEN (The Structure of Spark Discharges [studied by Dust Figures, using Resin and Red-Lead to distinguish by Colour between Positively and Negatively Charged Parts]).—Y. Toriyama and U. Shinohara. (*Archiv f. Elektrot.*, 15th Feb. 1934, Vol. 28, No. 2, pp. 105–109.)

ELECTRICAL FIGURES ON PLATES IN AIR [New Light on Formation and Characteristics of Positive and Negative Figures: using Red Lead and Sulphur Powders].—J. G. Pleasants. (*Elec. Engineering*, February, 1934, Vol. 53, No. 2, pp. 300–307.)

DÉTECTION DE PHÉNOMÈNES SIMULTANÉS PAR DISPOSITIFS DE LAMPES TRIODES (Detection of Simultaneous Phenomena by Triode Valve Combinations [with Rejection of Cases of Apparent Simultaneity due to Chance]).—L. Leprince-Ringuet. (*Ann. des P.T.T.*, February, 1934, Vol. 23, No. 1, pp. 63–67.)

The method of Bothe and Kolhörster, in which the anode-circuit impulse in a tetrode occurs only when the two grids are affected simultaneously, is not perfectly symmetrical (owing to the different positions of the two grids) and cannot be extended to a large number of circuits. The writer gives a perfectly symmetrical circuit, whose principle is due to Rossi, which can be thus extended. Each "receiving" circuit controls the grid of its own low-resistance triode, the plates of all these being commoned and connected through a biasing battery to the grid of a "selecting" triode. This grid is connected through a resistance, very high compared with the other circuit resistances, to the positive pole of the common anode battery, which also goes direct to the recording instrument and the anode of the "selecting" triode, whose bias is adjusted so that no repose current flows in the output circuit. The grids of the "detecting" valves are adjusted so that in any valve a signal (suitably regulated in amplitude) renders the filament/plate resistance infinite: if, however, the other valves are not affected simultaneously, their low resistances remain in parallel and no impulse reaches the "selecting" grid.

DIE VON DER ULTRASTRAHLUNG ERZEUGTE ELEKTRISCHE LEITFÄHIGKEIT DER UNTEREN ATMOSPHÄRE (The Electrical Conductivity of the Lower Atmosphere produced by the Cosmic Radiation ["Ultra-Radiation" Layer around 25 Kilometres]).—E. Lenz. (*Hochfztech. u. Elekzakus.*, February, 1934, Vol. 43, No. 2, pp. 47–51.)

For a preliminary communication *see* January Abstracts, p. 32. Author's summary:—"From the intensity measurements of the cosmic radiation in the earth's atmosphere, which were obtained by Regener with recording instruments in balloon tests up to a height of 25 km, the ionising power of the ultra-radiation, the ion content, and the electrical conductivity of the earth's atmosphere have been calculated. With the known values of the ion constants the following values at 25 km are obtained without any extrapolation:—ionising power 12 J/cm³ sec., ion content 1.0×10^4 J/cm³, and conductivity $\lambda = 50 \times 10^{-12}$ ohm^{-1} cm^{-1}, from which the ionising power reaches a maximum value $q_{max.} = 45$ J/cm³ sec. at a height of 13 km (J = ion pairs).

"It is thus found that in the earth's atmosphere, in addition to the Kennelly-Heaviside layers with their maximum ion density at about 100 km and above, there is also an ultra-radiation layer which, on account of the greater penetrating power of the ultra-radiation, lies much nearer to the earth's surface. The important difference between these two layers consists in the fact that the ultra-radiation layer has a maximum of 10^4 ion pairs, while the Heaviside layer has about 10^4 free electrons per cm³; so that the ultra-radiation layer can have no influence on the short radio waves, only on the propagation of the long waves." The writer considers that Benndorf's statement, that the cosmic radiation is of importance as an ionising factor for the Heaviside layer at night, is disproved.

MEASUREMENTS OF THE FLUCTUATION OF COSMIC RAYS. III.—W. Messerschmidt. (*Zeitschr. f. Physik*, 1934, Vol. 87, No. 11/12, pp. 800–805.)

Greater radiation is found from a westerly direction, denoting predominance of positive particles in the rays; the zenith distance of the maximum of difference in intensity is 45°. For Parts I and II *see* February Abstracts, p. 87, r-h column.

DIRECTIONAL MEASUREMENTS ON THE COSMIC RAYS NEAR THE GEOMAGNETIC EQUATOR.—B. Rossi. (*Phys. Review*, 1st Feb. 1934, Series 2, Vol. 45, No. 3, pp. 212–214.)

Experiments made at Asmara (East Africa) at a geomagnetic latitude of 11° 30′ and an elevation of 2 370 m gave remarkably greater intensity from the west than from the east for the same zenith angle; the intensities from the northern and southern directions were the same within the limits of experimental error. It is therefore concluded that a portion at least of the cosmic radiation consists of positively charged particles, but the writer does not agree with Compton's view (1933 Abstracts, p. 322, second abstract) that the main part is due to rays which are not affected by the earth's magnetic field. He finds rather that the "cosmic rays consist chiefly of a charged corpuscular radiation with a continuous energy spectrum extending to very great energies . . . the charge is predominantly positive." Other charged particles and gamma-radiation may, however, also be present.

ABSORPTION MEASUREMENTS ON THE COSMIC RAYS AT 11° 30′ GEOMAGNETIC LATITUDE AND 2 370 METRES ELEVATION.—S. de Benedetti.—(*Phys. Review*, 1st Feb. 1934, Series 2, Vol. 45, No. 3, pp. 214–215.)

Cf. above abstract. The writer of this letter has measured the absorption of the cosmic corpuscular radiation in lead by the double coincidence method. He emphasises the presence of negative particles and gamma-radiation in the cosmic radiation.

DIRECTIONAL MEASUREMENTS OF THE COSMIC RADIATION AND THEIR SIGNIFICANCE [Relative Proportions of Positive and Negative Particles].—T. H. Johnson. (*Phys. Review*, 15th Feb. 1934, Series 2, Vol. 45, No. 4, p. 294: abstract only.)

ABSORPTION MEASUREMENTS OF THE COSMIC RADIATION [Résumé of Recent Results].—T. H. Johnson. (*Journ. Franklin Inst.*, February, 1934, Vol. 217, No. 2, pp. 167–171.)

THE PASSAGE OF THE CORPUSCLES OF THE COSMIC RADIATION THROUGH GREAT THICKNESSES [of the order of 90 cm] OF LEAD.—B. Rossi and G. Bottecchia. (*La Ricerca Scient.*, 15th Feb. 1934, 5th Year, Vol. 1, No. 3, pp. 171–172.)

A NEW HARD COMPONENT OF THE COSMIC ULTRA-RADIATION [Corlin's New Component probably also found by Kolhörster].—A. Corlin. (*Nature*, 17th March, 1934, Vol. 133, p. 419.) *See* April Abstracts, p. 202, r-h column.

COSMIC RAYS UNDER 600 METRES OF WATER.—W. Kolhörster. (*Nature*, 17th March, 1934, Vol. 133, p. 419.)

The upper limit of the apparent mass absorption coefficient of the hardest cosmic rays is found, from measurements in 500 m and 600 m levels, to be 1.8×10^{-5} cm² gm⁻¹.

NEW RESULTS FROM COINCIDENCE MEASUREMENTS [of Cosmic Radiation] WITH A PAIR OF COUNTERS.—J. N. Hummel. (*Naturwiss.*, 16th March, 1934, Vol. 22, No. 11, p. 170.)

PRINCIPLE OF A COSMIC RADIATION SPECTROGRAPH [Arrangement of Shielded Counters, Superposed in Meridian Plane of Earth's Magnetic Field].—H. Zanstra. (*Naturwiss.*, 16th March, 1934, Vol. 22, No. 11, pp. 171–172.)

MEASUREMENT OF THE VARIATION WITH PRESSURE OF IONISATION CURRENTS [in Cosmic Radiation Measurements].—P. Kraus. (*Zeitschr. f. Physik*, 1934, Vol. 88, No. 1/2, pp. 99–102.)

SEPARATION OF THE COMPONENTS OF COSMIC RADIATION, USING DOUBLE COINCIDENCE MEASUREMENTS.—M. Ackemann. (*Naturwiss.*, 16th March, 1934, Vol. 22, No. 11, pp. 169–170.)

SECONDARY PHOTONS IN COSMIC-RAY SHOWERS.—C. D. Anderson and S. H. Neddermeyer. (*Phys. Review*, 15th Feb. 1934, Series 2, Vol. 45, No. 4, p. 295: abstract only.)

THE THREE TYPES OF COSMIC-RAY FLUCTUATIONS AND THEIR SIGNIFICANCE [Cosmic Ray Bursts due to Battery Charging Electroscope].—R. A. Millikan, C. D. Anderson and H. V. Neher. (*Phys. Review*, 1st Feb. 1934, Series 2, Vol. 45, No. 3, pp. 141–143.)

A POSSIBLE EXPLANATION OF THE FREQUENCY DISTRIBUTION OF SIZE OF HOFFMANN STÖSSE [of Cosmic Rays].—C. G. Montgomery. (*Phys. Review*, 15th Feb. 1934, Series 2, Vol. 45, No. 4, p. 294: abstract only.)

FURTHER GEOGRAPHIC STUDIES OF COSMIC RAYS.—A. H. Compton, J. M. Benade and P. G. Ledig. (*Phys. Review*, 15th Feb. 1934, Series 2, Vol. 45, No. 4, pp. 294–295: abstract only.)

THE NATURE OF STATISTICAL FLUCTUATIONS WITH APPLICATIONS TO COSMIC RAYS.—R. D. Evans and H. V. Neher. (*Phys. Review*, 1st Feb. 1934, Series 2, Vol. 45, No. 3, pp. 144–151.)

NEUTRONS OF HIGH ENERGY FROM COSMIC-RAY BURSTS IN ALUMINIUM.—G. L. Locher. (*Phys. Review*, 15th Feb. 1934, Series 2, Vol. 45, No. 4, pp. 296–297: abstract only.)

COMPARISON OF ABSORPTION COEFFICIENTS OF DIFFERENT ELEMENTS FOR COSMIC RAYS.—J. C. Stearns and C. Hedberg. (*Phys. Review*, 15th Feb. 1934, Series 2, Vol. 45, No. 4, p. 294: abstract only.)

ON THE FREQUENCY OF THE SECONDARY PHENOMENA PRODUCED BY THE PENETRATING RADIATION IN MEDIA OF DIFFERENT ATOMIC NUMBER.—G. Alocco and A. Drigo. (*La Ricerca Scient.*, 31st Jan. 1934, 5th Year, Vol. 1, No. 2, pp. 112–113.)

PROPERTIES OF CIRCUITS

SUR LES HARMONIQUES ENGENDRÉS DANS L'AMPLIFICATION PAR LAMPES. NOTION DE COEFFICIENT DE PURETÉ (The Harmonics produced in Amplification by Valves. The Idea of a "Purity Coefficient").—V. Baranov. (*L'Onde Élec.*, December, 1933. Vol. 12, No. 144, pp. 569–576.)

Author's summary :—"For a given circuit of an amplifier valve it is possible to take the characteristic curve field and to find from it by a graphical method a parameter which may be called the 'factor of purity.' This factor expresses the relation existing, in the output current, between the amplitude of the first harmonic and that of the fundamental, the grid a.c. potential being supposed to be perfectly sinusoidal." The field of curves is plotted with the plate potentials v as abscissae and the anode currents i as ordinates, each curve being for a different value (in arithmetical progression) of the grid potential u, so that the curve field represents $i = F(v, u)$. Then the horizontal distances between the curves are proportional to the amplification coefficient k, the vertical distances are proportional to the slope s, and the internal resistance is given at any point by the angular coefficient of the tangent to the curve at that point.

The first circuit dealt with has a simple coupling resistance R in the anode circuit. If E is the constant voltage of the plate battery, the current i produces in R a potential drop of Ri, and we have $E - v = Ri$. This equation is that of a straight line PD drawn from the point $v = E$ on the horizontal axis with the angular coefficient $-1/R$ equal to the anodic conductance with sign changed. The working point moves along this line across the curve field, so that for an instantaneous value u_0 of the grid potential u the working point is the intersection of PD with the curve $u = u_0$. If u is given by $u = u_0 + U \cos \omega t$, a series can be obtained for v of which often the first three terms only need be kept, especially if the amplitudes of u are small. From this series (equation 4) the writer obtains his "purity coefficient" η given by $\eta = U/4 \cdot (d^2v/du^2)_0/(dv/du)_0$, which is the ratio of the amplitude of the first harmonic to that of the fundamental. To obtain η from the curve field, the distances along PD between the curves u_0 (cutting PD at A), $u_0 + U$ (cutting at B) and $u_0 - U$ (cutting at C) are measured : then η is given by $\eta = \frac{1}{2}(\mathrm{AC} - \mathrm{AB})/(\mathrm{AC} + \mathrm{AB})$. The writer then deals with the cases of a transformer inserted in the anode circuit and a biasing resistance in the cathode circuit : the formula for η still holds good.

THE AMPLIFICATION OF SMALL ALTERNATING VOLTAGES BY ELECTRON TUBES [including Effect of Grid Current].—N. Vermes. (*Zeitschr. f. Physik*, 1934, Vol. 87, No. 9/10, pp. 647–658.)

SUR LES DIFFÉRENTS GENRES POSSIBLES D'OSCILLATIONS ÉLECTRIQUES (On the Different Possible Types of Electrical Oscillations [in a Simple Triode Oscillator Circuit : "Elementary," "Saturation," "Shock," "Retarded," and "Relaxation" Oscillations as Successive Phenomena in Same Circuit]).—J. Mercier. (*Comptes Rendus*, 22nd Jan. 1934, Vol. 198, No. 4, pp. 349–351.)

The dynamic characteristic i_a/e_a has a tangent of negative slope with which it may be merged for a considerable length. It is limited and extended by two horizontal straight lines, that of saturation and that of zero current, with which it is joined by two bent links. If the coupling is weak, the working point keeps to the rectilinear portion of the characteristic and the oscillations are almost perfectly sinusoidal, even those of the plate current. The amplitude of these "elementary" oscillations is comparatively small and increases with the coupling. The apparent resistance fluctuates between a small negative value R' and a positive value less than R, the original resistance of the circuit. The frequency is therefore higher than that of the natural oscillations of the circuit.

If the coupling is increased, the negative value of R' increases : the working point may reach the saturation and zero-current straight lines. The plate current is represented by an amplified sine curve truncated above and below : the frequency of the "saturation" oscillations remains slightly above the natural frequency of the circuit. If the coupling is tightened further the time during which the resistance is different from R diminishes ; that corresponding to R' simultaneously increases, and the frequency gets nearer that of the circuit. R' may exceed the critical resistance of the circuit—that for which the latter becomes aperiodic : the pulsation is then imaginary. But that does not change the form of the phenomena : saturation is merely reached more quickly and the circuit behaves as if it received, at each half-period, a sudden impulse just at the moment when the potential at the condenser terminals is zero. This (the "shock" oscillation régime) is the indispensable condition for the period to be *exactly* that of the oscillating circuit.

During the above processes the grid current is assumed to be zero, as will be the case if the grid bias is sufficiently negative. But if the amplitude continues to grow, grid current will appear : the characteristic becomes no longer symmetrical, and for plate potentials which are small and decreasing it shows a dipping portion whose slope becomes more and more positive. The apparent resistance increases and a self-braking effect is produced, as if a low-damping aperiodic circuit were strongly shunting the oscillating circuit. The instantaneous frequency diminishes and the period of the "retarded" oscillations becomes greater than that of the oscillating circuit. Finally, if the grid current becomes very large, the "braked" apparent resistance exceeds the critical resistance of the circuit. The end of the charging of the condenser and the beginning of its discharge become aperiodic, and "relaxation" oscillations are obtained.

The writer continues : "Naturally the oscillations obtained, in general, are of a mixed type. To some extent they are all 'braked' oscillations, although in the absence of grid current the apparent resistance of the circuit never becomes less than R, the actual circuit resistance. The last, on the other hand, are of the saturation type although they can be obtained without the saturation current being reached. Finally, the aperiodicity at the beginning does not necessarily entail aperiodicity at the end of the condenser charge : oscillations may be of 'shock' type without being of 'relaxation' type, and inversely. They may also, obviously, be of both types at the same time. It is, moreover,

possible to obtain purer relaxation oscillations by starting with an aperiodic circuit."

THEORETISCHE BEHANDLUNG EIN- UND MEHRLAGIGER SPULEN IN BELIEBIGER SCHALTUNG (Theoretical Treatment of Single- and Multi-Layer Coils in Any Type of Circuit).—H. Zuhrt. (*Archiv f. Elektrot.*, 15th Feb. 1934, Vol. 28, No. 2, pp. 109–121.)

Continuation of the work referred to in January Abstracts, p. 48, r-h col. Author's summary :—"A theory is developed by which the behaviour can be calculated of any cylindrical coil in any connection, for 'quasi-stationary' frequencies (small compared with the natural frequency of the winding). From Maxwell's field equations the quasi-stationary simplified field for any unknown current distribution, for single-layer coils, is first calculated. The fulfilment of the limiting conditions yields an equational system for the determination of the unknown current coefficients, and thus for the determination of all the coil currents and voltages and the natural frequencies for any type of external connection. As an example, the natural wavelengths of a single-layer coil with parallel condenser are calculated and compared with the measured values [agreement on the average within 7%]. In the last section an extension of the work to multi-layer coils, on the assumption of large spacing between the layers, is given, and confirmed by measurements."

ALLGEMEINE THEORIE DES ELEKTRISCHEN SCHWINGUNGSKREISES (General Theory of the Oscillating Electric Circuit).—E. Hallén. (*Arkiv för Mat., Astr. och Fysik*, 1933, Vol. 24A, No. 5, pp. 1–38.)

A complete formula is found for the natural frequencies of an oscillating circuit consisting of a condenser and a short single-layer coil. The experimental verification was referred to in March Abstracts, p. 148.

GENERAL METHOD FOR THE CALCULATION OF ELECTRICAL HIGH-TENSION NETWORKS INTERCONNECTED IN A PERMANENT EQUILIBRATED RÉGIME.—Ch. Lavanchy. (*Comptes Rendus*, 29th Jan. 1934, Vol 198, No. 5, pp. 458–460.)

A MECHANICAL WAVE MODEL ILLUSTRATING ACOUSTIC AND ELECTRICAL PHENOMENA [Band Pass Filter].—G. D. West. (*Proc. Phys. Soc.*, 1st March, 1934, Vol. 46, Pt. 2, No. 253, pp. 186–195.)

ARRANGEMENT FOR THE AUTOMATIC CALCULATION OF NETWORKS OF IMPEDANCES.—Abélès. (*See* under "Subsidiary Apparatus and Materials.")

A STUDY OF SUPER-REGENERATION.—Grimes and Barden. (*See* under "Reception.")

METHODS OF LINEARISING AMPLIFIERS AND THEREBY ENLARGING THE SCOPE OF RETROACTION IN INCREASING THE AMPLIFICATION.—Krawinkel. (*See* under "Reception.")

WIRK-, BLIND- UND SCHEINLEISTUNG BEI WECHSELSTRÖMEN MIT BELIEBIGER KURVENFORM (Real, Wattless and Apparent Power for Alternating Currents of Any Wave Form).—W. Quade. (*Archiv f. Elektrot.*, 15th Feb. 1934, Vol. 28, No. 2, pp. 130–138.)

SUR LE CALCUL DES OSCILLATIONS MÉCANIQUES OU ÉLECTRIQUES (The Calculation of Mechanical or Electrical Oscillations [General Method depending on the Use of Imaginary Quantities and on Elementary Tensorial Methods]).—J. Haag. (*Comptes Rendus*, 19th Feb. 1934, Vol. 198, No. 8, pp. 693–695.)

TRANSMISSION

ON A NEW TYPE OF ULTRA-SHORT-WAVE OSCILLATOR [Two-Valve Circuit resembling Holborn Oscillator but with Grid and Anode Joining-Leads bridged by High Resistance shunted by Condenser : No Lead from Grids to D.C. Source].—S. Ohtaka. (*Journ. I.E.E. Japan*, January, 1934, Vol. 54 [No. 1], No. 546, pp. 1–5 : English summary p. 1.)

Compared with a modified Holborn oscillator, on wavelengths around 280 cm, the new circuit has the advantages of a usually higher efficiency (especially at the lower voltages), less wavelength change when anode voltage is varied, and more linear modulation ; also, the absence of a lead between grids and d.c. source reduces the likelihood of parasitic oscillations due to undesired couplings.

ELECTROMAGNETIC WAVES OF 1.1 CM WAVELENGTH [Produced by Magnetron Oscillator : Measured by Spectrometer with Echelette Grating] AND THE ABSORPTION SPECTRUM OF AMMONIA.—C. E. Cleeton and N. H. Williams. (*Phys. Review*, 15th Feb. 1934, Series 2, Vol. 45, No. 4, pp. 234–237.) *See* also under "Miscellaneous."

SELF-MODULATED ULTRA-SHORT-WAVE TRANSMITTER [Brake-Field Circuit with Tuned Circuit in parallel with Negative Resistance of Oscillating Circuit].—Te-Ka-De : Kohl and Pintsch. (German Pat. 564 449 : *Funktech. Monatshefte*, February, 1934, No. 2, p. 83.)

VACUUM TUBE ELECTRONICS AT ULTRA-HIGH FREQUENCIES.—F. B. Llewellyn. (*Bell S. Tech. Journ.*, January, 1934, Vol. 13, No. 1, pp. 59–101.) *See* February Abstracts, pp. 89–90.

DIE ABLEITUNG EINER UKW-SCHALTUNG AUS DER KÜHN-HUTH-SCHALTUNG (The Derivation of an Ultra-Short-Wave Transmitting Circuit from the Huth-Kühn Circuit).—W. Möller : Scheibe. (*Radio, B., F. für Alle*, February, 1934, No. 144, pp. 22–23.)

The original Huth-Kühn circuit depends for its retroaction coupling between grid and anode circuits on the internal valve capacities, inductive coupling being eliminated. The derivation from this of Scheibe's circuit, for u.s.w. working, is shown.

AUDIO-FREQUENCY CHARACTERISTICS OF DYNATRON OSCILLATORS, AND THE EFFECTIVE RESISTANCE OF INDUCTANCE COILS.—R. Usui and S. Morisaki. (*Journ. I.E.E. Japan*, January, 1934, Vol. 54 [No. 1], No. 546, pp. 29–38: English summary pp. 5–6.) Experimental confirmation of the theoretical results dealt with in March Abstracts, p. 150.

ON THE DIFFERENT POSSIBLE TYPES OF ELECTRICAL OSCILLATIONS ["Elementary," "Saturation," "Shock," "Retarded" and "Relaxation" Oscillations as Successive Phenomena in Same Circuit].—Mercier. (*See* under "Properties of Circuits.")

HOCHFREQUENTE STÖRMODULATION ALS FOLGE VON LAGERSPANNUNGEN (Unwanted High-Frequency Modulation as a Result of Bearing Potentials [in Transmitters using Directly Heated Valves: Radio-Frequencies reach Heating-Current Generator and cause Discharges through Oil Films of Bearings: Method of Prevention at Beromünster Station]).—W. Gerber. (*Hochf:tech. u. Elek:akus.*, February, 1934, Vol. 43, No. 2, p. 66: summary only.)

UNUSUAL RANGES FROM THE 10 WATT TELEPHONY TRANSMITTER S 318 H [on Steam Trawler: Regular Communication over 1 200 Sea Miles by Night, 400 by Day].—(*Telefunken-Zeit.*, November, 1933, Vol. 14, No. 65, p. 56.)

RECEPTION

VERFAHREN ZUR LINEARISIERUNG UND ZUR STEIGERUNG DER RÜCKKOPPLUNGSFÄHIGKEIT VON VERSTÄRKERN (Methods of Linearising Amplifiers and thereby Enlarging the Scope of Retroaction in Increasing the Amplification).—G. Krawinkel. (*Funktech. Monatshefte*, February, 1934, No. 2, Supp. pp. 5–8.)

Taking a simple circuit of amplifier with retroactive coupling, the writer shows that for linear amplification the relation $D + 1/F(E_m) \cdot R_a - k = const.$ must be fulfilled, D being the valve "durchgriff" ($1/\mu$), E_m the modulating voltage, and k the coupling factor. Once this relation holds good, the degree of amplification can be largely increased, "since by suitable retroactive coupling there is no difficulty in making the right-hand side of the equation as small as is desired." Linearising and increase of retroaction effectiveness go hand in hand, and the two problems should be treated together. If (as is often the case) the former is obtained at the cost of amplification, the latter will more than make up for this.

The writer deals in turn with the determining factors in the equation mentioned, discussing various ways in which each may be made to fulfil the required condition, *the others being kept constant*. Thus as regards D the variable-mu valve is mentioned, but the greatest attention is paid to *circuit* methods of rendering D variable with the amplitude of the modulating voltage. The German patent No. 540 339 is referred to, and Fig. 3 gives an example of the use of an auxiliary valve circuit connected in parallel with the grid/anode capacity, regulating the "durchgriff" so as to linearise the amplifier through a sufficiently wide working range. The unwanted negative retroaction coupling of the main valve, due to the auxiliary circuit, is counteracted by the positive retroaction coupling shown in the diagram. The anode resistance R_a is then taken separately, D and k being assumed constant. The linearising condition then becomes that R_a shall be proportional to $1/F(E_m)$. Hofer's work is referred to (Abstracts, 1932, p. 223), and the resistance properties of the simple circuit of Fig. 4 (triode with grid tapped on to a potential divider across anode and cathode) are shown, the combination of this, as an auxiliary circuit across the main valve, being given in Fig. 5. Such an arrangement gives a linearisation of the output voltage so long as no appreciable power is taken from the main valve. If anode current has to be linearised, the circuit of Fig. 8 (combination of the retroaction circuit of Fig. 6 with the auxiliary valve circuit of Fig. 7) is applicable. The last factor to be considered is k. There are many ways of making this fulfil the linearising condition $k = const. + 1/F(E_m) \cdot R_a$; a simple method is shown in Fig. 9, which gives the linear relation between input and output voltages represented by $E_a = -e/(D - 1/d)$, where d is the "durchgriff" of the auxiliary valve.

In the above, the various factors have been considered in turn, the others remaining constant. The final section deals with the simultaneous variations, with amplitude of the modulating voltage, of more than one factor. The previous treatment concerned triodes only, for the sake of simplicity; but the results are obviously applicable to multi-grid valves. Fig. 10 shows a linearising circuit in which retroaction takes place from the tuned circuit in the anode lead of a screen-grid valve to the screen grid: across this retroaction coupling lies an auxiliary valve circuit which not only renders the coupling coefficient dependent on the amplitude, but also varies the anode impedance of the main valve with varying load. Fig. 11 shows a long-wave (of the order of 2 000 m) resonance curve taken with such a circuit, giving a logarithmic decrement of 1/975. For such a long wave this value is "extraordinarily small" and the selective amplification correspondingly high, without any tendency towards oscillation. For telephonic reception the side-band cutting suggested by the curve of Fig. 11 can be cured by the use of band-filter circuits in the circuit of Fig. 10. The circuit can also be combined with the use of a variable-mu valve, in which case all the three factors are made to contribute to the linearisation.

VARIABLE AND FIXED BROADCAST BAND-PASS FILTERS.—E. Glowatzki: Cauer. (*Hochf: tech. u. Elek:akus.*, February, 1934, Vol. 43, No. 2, pp. 51–56.)

In "straight" receivers the modern need for variable band filters is usually "very primitively and inadequately" supplied by two coupled oscillatory circuits. In superheterodynes a fixed Wagner filter for the i.f. circuit is by common accord limited to 3 stages, an increase in number apparently bringing no advantage; with this "optimum" one has to be contented with a pass-

band of less than 5 kc/s if the required selectivity sharpness of 9 kc/s is to be obtained. After pointing out the unsatisfactory nature of all this, the writer recalls his paper (January Abstracts, p. 50) on the practical design of filters of all kinds on the "bridge" principles laid down by Cauer. The present paper concentrates on filters of this type for broadcast receivers, including the continuously variable filters needed for "straight" sets. This condition of variability limits the number of types of circuit which can be used; of these, some are applicable if the variation is to be performed by adjustable condensers, others when adjustable coils are employed. An example of each case is worked out, the requirements being the same, namely a pass-band of 7 kc/s with a cut-out band of 9 kc/s, the range being between 150 and 475 kc/s, and the damping outside the cut-out band being not less than 4.6 nepers (class 4b* filter). Still better performance can be obtained by choosing, from the given tables, a "higher class" circuit.

The writer ends by saying that in the present paper he cannot deal with the practical difficulties which may be met with in applying these filters to broadcast receivers. He mentions, however, that for filters up to "class 4" an accuracy within 1–2% is enough for the coils and condensers: even mechanically coupled rotating condensers can be made to these requirements. Practically ideal transformers for the broadcast band can be made (the writer here refers to Jaumann's paper, 1931 Abstracts, p. 566). One difficulty is the switching of the variable filter from the "short" to the "long" broadcast band. Two separate filters will be necessary until condensers can be made with a 1/100 ratio of "zero" to full-scale capacity.

A STUDY OF SUPER-REGENERATION [Investigation of Free Oscillation in Series Resonant Circuit with Dynatron-produced Negative Resistance: Quench-Frequency of Rectangular Wave-Form].—D. Grimes and W. S. Barden. (*Electronics*, February, 1934, pp. 42–44: from a Report.)

Among the conclusions reached are the following:—To obtain a certain sensitivity, the strength of the q.f. emf at 5 kc/s is far less than when using 25 kc/s, and for a given q.f. emf and a given amount of feed-back the system becomes more sensitive as the q.f. is decreased. A low q.f. also favours selectivity. Although in a strictly technical sense super-regeneration is no more effective at short than at long waves, it is the only known practical method of obtaining great amplification (50 000 with ease) at short waves, with a single stage, or "any worthwhile" degree of amplification at 5 m. "With the same q.f. and the same amplification in each case the 300-m system [under consideration] will be less selective, and the 5-m system will be more selective, than could be realised with the coils and their inherent resistances . . .", but "practical super-regenerative circuits at 5 m, as evolved to date, do not allow even a remote approach to 10 kc separation of carriers." When using an audible q.f., the audibility of the q.f. tone increases when an unmodulated carrier signal is applied, because the latter becomes modulated at the q.f. The q.f. tone can be balanced out, except when the signal is applied, by using two super-regenerative valves in push-pull. "Further decrease of the q.f. tone requires that a q.f. emf be applied in the a.f. system, with proper phase and with adjustable strength—depending on signal level, etc."

A STUDY OF THE POSSIBILITIES OF RADIO-FREQUENCY VOLTAGE AMPLIFICATION WITH SCREEN-GRID AND WITH TRIODE VALVES [Screen-Grid Valve not the Only and not necessarily the Best Solution in All Cases: the Use of a "Buffer Valve"].—F. M. Colebrook. (*Journ. I.E.E.*, February, 1934, Vol. 74, No. 446, pp. 187–198.)

It is shown that the output obtainable from s.g.-valve tuned-circuit amplifying stages is limited by curvature in the amplification characteristic, arising, apparently, from the effects of secondary emission from the screen grid. It is also shown that a buffer-valve stage enables an ordinary triode to be used for r.f. amplification at least up to frequencies of the order of 10^6 c/s, giving amplification comparable with that of a s.g. stage and free from curvature up to outputs of the order of 100 volts. For Scott-Taggart's comments, quoting his early patent and practical development of the buffer circuit conception and "tuned-aperiodic-tuned" (T.A.T.) amplification, see *ibid.*, April, p. 361.

SOME CONSIDERATIONS ON THE ANODE HETERODYNE DETECTOR [Relation between Signal Voltage (Very Small compared with Heterodyning Voltage) and I.F. Current in Detector Anode Circuit: Formula for Detector operating under "3/2 Power" Law].—H. Seki. (*Journ. I.E.E. Japan*, January, 1934, Vol. 54 [No. 1], No. 546, pp. 25–28: English summary p. 4.)

NIEDERFREQUENZVERSTÄRKER MIT NEUER KOPPLUNG (The Low-Frequency Amplifier with the New [Glow-Discharge Tube] Coupling).—M. Balzerowski: Stockhusen. (*Funktech. Monatshefte*, February, 1934, No. 2, p. 66.)

The writer has constructed an amplifier on the lines indicated by Stockhusen (February Abstracts, p. 91, l-h col.), and finds it "practicable" but not appreciably better as regards quality than an amplifier with resistance-capacity coupling, except that it may give a somewhat more uniform and better amplification of the low notes, especially noticeable with records of organ music. Stockhusen replies, quoting Schäfer's opinion that the coupling gives such wonderfully faithful reproduction that only particularly successful records give real satisfaction. Regarding the writer's complaint that the method limits the number of stages to two, so that the output RE 604 cannot be fully controlled, Stockhusen agrees that for gramophone reproduction this is true (for radio the difficulty is overcome by more r.f. amplification) but considers that an RE 304 is suitable: or a preliminary stage can be added without losing the advantage of a distortionless output stage. But he admits that it is desirable to maintain the direct glow-discharge coupling throughout the amplifier, and therefore proposes to experiment with a screen-grid valve as the first stage.

NEON-TUBE INTER-VALVE COUPLING.—G. Shearing: Smith and Hill. (*See* abstract under "Miscellaneous"—Shearing.)

THE EMPIRE SHORT-WAVE SERVICE [Advice on Reception: A.V.C.: Aerials for Short-Wave Receivers with "Aperiodic" Aerial Circuits].—N. Ashbridge. (*World-Radio*, 9th March 1934, Vol. 18, No. 450, pp. 349 and 353.)

The second of a series of broadcast talks. The writer has found that with the "aperiodic aerial circuits" usually employed in Empire short-wave receivers the longer the aerial the better the result: "in fact, aerials with a horizontal portion up to about 300 ft seem to be quite satisfactory in some cases, and it even seems to be advantageous to bring the far end of the aerial down towards the earth in order to increase the capacity, keeping the middle of the horizontal part as high as possible." In spite of the tendency to be "directional," this arrangement seems to give a great increase of signal strength over the ordinary 100-ft aerial, and does not appear to interfere with the selectivity of the set. The advantage is probably due to the high-capacity aerial being more suitable for the very loose coupling to the first tuned circuit. Where the set is suitable, and there is plenty of space and the aerials are properly erected, there is bound to be a very considerable gain from the use of a "scientific" variety of aerial, such as the "inverted-V" type (April Abstracts, p. 208, r-h column).

THE VARIATION OF ULTRA-SHORT-WAVE RECEIVED SIGNAL STRENGTH WITH AERIAL LENGTH [Theoretical Results compared with Observations].—Muyskins and Kraus: Colebrook. (*World-Radio*, 9th March, 1934, Vol. 18, No. 450, p. 362.) *See* January Abstracts, p. 30.

IMPORTANCE OF THE EARTH CONNECTION [Bad Reception and alleged "Blind Spots" due to Bad Earth Contact: Difference when Earth Tubes are made to reach a Suitable Subsoil Layer].—(*World-Radio*, 9th March, 1934, Vol. 18, No. 450, p. 353.)

WITH OR WITHOUT RETROACTION?—R. Rechnitzer. (*Funktech. Monatshefte*, February, 1934, No. 2, pp. 63–65.)

PROGRESS AND THE RECEIVER [Survey of Past Year].—W. T. Cocking. (*Wireless World*, 9th March, 1934, Vol. 34, pp. 162–163.)

NEW RECEIVERS AT THE LEIPZIG FAIR.—E. Schwandt. (*See* reference under "Miscellaneous.")

The Telefunken 3-valve "Nauen" superhet has been re-designed: the principle of the alternative intermediate frequency has been retained, but the i.f. has been raised to avoid interference from Luxembourg and elsewhere. The higher i.f. causes a certain loss in sensitivity which is compensated by the use of the h.f. pentode. There is a blocking circuit for waves on these intermediate frequencies, and a wave trap at the input end to prevent image formation: this consists in taking a tapping from the tuned-circuit coil to the grid: "a circuit with a centre-tapped coil gives not only its circuit resonance but also, at a definite distance from this, a marked rejector resonance" which, by suitable dimensioning, can be made to correspond exactly to the image frequency of the required station. A new Tefag 4-valve superhet uses two hexodes and a binode, the AVC acting on both hexodes. The Nora 4-valve superhet seems to be the only one of its class to have optical tuning.

DO RADIO LISTENERS WANT HIGH FIDELITY? [Difference of Opinion on Popularity of Notes above 3–4 Kc/s: "Tone Controls nearly always turned to Maximum Bass": What is Wrong?]—(*Electronics*, February, 1934, p. 33: Editorial note.)

RECEIVER DESIGN TRENDS: HIGH FIDELITY, REMOTE TUNING AND SELF-ADJUSTING CIRCUITS [Automatic Channel Control, AVC, and Automatic Tone Control] WILL LEAD.—M. L. Muhleman. (*Rad. Engineering*, February, 1934, Vol. 14, No. 2, pp. 7–10 and 24.)

Including references to the "noise gate and flashograph" neon-tube device; automatic channel control with heterodyne frequency drift corrected (*e.g.*) by a thermostatic condenser shunting the tuned oscillator circuit; methods of automatic tone control; etc.

AVC APPLIED TO AUDIO-FREQUENCY AMPLIFIER TUBES [Ordinary R.F. Control often Unsatisfactory: Improved by Additional A.F. Control, using Variable-Mu Valves suitable for Audio-Frequencies].—J. R. Nelson. (*Electronics*, February, 1934, pp. 50–51.)

"ANNOUNCER KILLERS" [Anti-Talk Devices on Receivers].—(*Electronics*, February, 1934, p. 55.) *See* also April Abstracts, p. 207.

THE INTERFERENCE OF ELECTRICAL PLANT WITH THE RECEPTION OF RADIO BROADCASTING.—A. Morris. (*Journ. I.E.E.*, March, 1934, Vol. 74, No. 447, pp. 245–263.)

The full paper, a summary of which was referred to in Abstracts, February, p. 91, r-h col. *See* also January, p. 35, l-h col., for articles by the same writer. A long Discussion follows the paper.

REGULATIONS AGAINST INDUSTRIAL INTERFERENCE WITH RADIO RECEPTION IN FRANCE.—(*Rev. Gén. de l'Élec.*, 3rd March, 1934, Vol. 35, No. 9, pp. 293–294.)

EFFECT OF SPARK SUPPRESSORS ON AUTO PERFORMANCE.—(*Electronics*, February, 1934, pp. 54–55.) *See* also *ibid.*, March, 1934, p. 70.

PRÜFUNG VON RUNDFUNKEMPFÄNGERN AM LAUFENDEN BAND (The Conveyor Band Testing of Broadcast Receivers).—P. Geuter and H. Fery. (*E.T.Z.*, 8th March, 1934, Vol. 55, No. 10, pp. 248–250.)

THE SUCCESS OF THE "VOLKSEMPFANGER"—THE "PEOPLE'S RECEIVER": STATISTICS: VALUABLE ACCESSORIES [Wave Traps, Scale Illuminating Unit, Tone Control, etc.].—E. Schwandt. (*Funktech. Monatshefte*, February, 1934, No. 2, pp. 67–72.)

RECEIVERS [for Large Traffic Stations: Radio-Marine Services: Direction-Finding: etc.].—(*Bull. S.F.R.*, Oct./Nov./Dec., 1933 Vol. 7, No. 5, pp. 113–129.)

THE EVERYMAN [5-Valve] BATTERY SUPER.—W. T. Cocking. (*Wireless World*, 16th and 23rd March, 1934, Vol. 34, pp. 178–180 and 198–200.)

H.F. PENTODE FOUR, BATTERY OPERATED.—(*Wireless World*, 23rd Feb. 1934, Vol. 34, pp. 124–127.)

QUIESCENT PUSH-PULL THREE [with Special Push-Pull Valve (Two Pentodes in Single Bulb)].—(*Wireless World*, 2nd March, 1934, Vol. 34, pp. 140–142.)

AERIALS AND AERIAL SYSTEMS

NEUE RICHTSTRAHLER FÜR DEN DEUTSCHEN WELTRUNDFUNK (The New Directional Aerial Arrays for German World Broadcasting [Zeesen Station]).—H. Mögel. (*E.T.Z.*, 15th March, 1934, Vol. 55, No. 11, pp. 265–267.)

AERIALS FOR SHORT-WAVE RECEIVERS WITH "APERIODIC" AERIAL CIRCUITS.—Ashbridge. (*See* abstract under "Reception.")

THE VARIATION OF ULTRA-SHORT-WAVE RECEIVED SIGNAL STRENGTH WITH AERIAL LENGTH [Theoretical Results compared with Observations].—Muyskins and Kraus: Colebrook. (*World-Radio*, 9th March, 1934, Vol. 18, No. 450, p. 362.) *See* January Abstracts, p. 30.

DER ZWISCHENKREIS DER FUCHS-ANTENNE (The Coupling Circuit of the "Fuchs" Aerial [differing from Usual L-Aerial in being Excited at Potential Loop: Calculation of Flywheel Coupling Circuit].—H. Jäger. (*Funktech. Monatshefte*, February, 1934, No. 2, pp. 72–73.)

MEASURING THE RESISTANCE OF BROADCAST ANTENNAS [by Resistance or Reactance Variation Method or Substitution Method].—S. Helt. (*Electronics*, February, 1934, pp. 45–47.)

DIE TURMBELEUCHTUNG DES LANDESSENDERS BEROMÜNSTER (The Illumination of the Towers of the Beromünster Station).—W. Gerber. (*Hochf:tech. u. Elek:akus.*, February, 1934, Vol. 43, No. 2, pp. 65–66: summary only.)

Each of the two 125-metre iron towers rests on four feet which are insulated from the ground. Induction from the transmitting aerial produces potentials of the order of 1 000 volts between the feet and the ground, to which lightning adds potentials limited, by protecting gaps, to 35 000 volts. Under these conditions the illumination of the towers presents certain difficulties, and a h.f. filter circuit is necessary. One side of the lighting feeder is connected through one coil of the filter to a wire (protected by a steel tube) leading to the lamps on the tower. The return lead is provided by the tower itself, which is connected to the other main (and to earth) through the second inductance of the filter. No high frequency reaches the feeder.

VALVES AND THERMIONICS

BESTIMMUNG DER PRIMÄRELEKTRONENSTRÖME IN TRIODEN DURCH ENERGIEMESSUNGEN (The Determination of the Primary Electron Currents in Triodes by Energy Measurements).—H. A. Schwarzenbach. (*Helvet. Phys. Acta*, Fasc. 1, Vol. 7, 1934, pp. 108–148.)

Author's summary:—"A new method is described for the separate determination of the primary and secondary electron currents in triodes. The method distinguishes between the two types of electron by means of their energies, which by a preliminary calibration can be found in watts from the electrode heating produced by the electron bombardment. Then, with the potential differences known as well as the energies, the currents can be calculated. The great advantage of the method is that the secondary emission need not be eliminated artificially: the valve can be investigated under perfectly normal working conditions.

"Two examples, with different procedures [the second only applicable to a triode with cylindrical electrodes and a ferromagnetic anode], show the serviceability of the method. Discussion of the experimental results first shows the necessity for assuming considerable mean emergence energies for the secondary electrons; then as a result of discrepancies in the measurements of the grid-radiation coefficients, it provides some information on the course of the electron paths inside the valve" [the anomalies being found to be explicable only as an effect of the spatial distribution, along the grid, of the electron current]. In his previous paper (1931 Abstracts, p. 270) the writer assumed a zero grid-radiation coefficient. The present paper concludes by pointing out that the first method (with thermoelement) is so simple, and so exact if carefully calibrated, that it should be useful for measuring h.f. oscillatory outputs, the energy radiated from filament to anode, etc. Also it should be possible, by screening, to lead out a narrow heat beam on to the thermoelement, and in this way to "scan" the whole anode surface bit by bit, to obtain information as to the distribution of the electron bombardment over that surface, and thus as to the electron paths inside the valve.

MEASUREMENTS WITH A THERMOELEMENT OF HIGH-FREQUENCY ENERGY, ELECTRON CURRENT DISTRIBUTION, ETC., IN VALVES.—Schwarzenbach. (*See* end of above abstract.)

THE DETERMINATION OF THE EXTERNAL WORK FUNCTION W_a [by Electron Diffraction Experiments: Theoretical Investigation].—F. Rother and H. Bomke. (*Zeitschr. f. Physik*, 1934, Vol. 87, No. 11/12, pp. 806–809). *See* also January Abstracts, p. 41.

THE DISTRIBUTION [in accordance with Maxwell's Law] OF INITIAL VELOCITIES OF POSITIVE IONS FROM TUNGSTEN.—G. J. Mueller. (*Phys. Review*, 15th Feb. 1934, Series 2, Vol. 45, No. 4, pp. 295–296: abstract only.)

ON A SERIES OF COEFFICIENTS INTERVENING IN CERTAIN PHENOMENA DEPENDING ON THERMAL AGITATION.—P. Weiss. (*Comptes Rendus*, 22nd Jan. 1934, Vol. 198, No. 4, pp. 302–304.

A PROPERTY OF TRIODE VALVES [Grid/Cathode Current controlled by Retarding Potential on Anode].—de Gramont and Beretzki. (*See* under "Measurements and Standards.")

INDIRECTLY HEATED VALVES IN THE AMPLIFICATION OF CONTINUOUS CURRENTS [Causes of Instability in Previous Bridge-Connected Amplifiers: the Advantages of Indirectly Heated Valves: etc.].—P. Donzelot, E. Pierret and J. Divoux. (*Comptes Rendus*, 5th March, 1934, Vol. 198, No. 10, pp. 912–913.) For the previous paper *see* 1933 Abstracts, p. 460, l-h column.

THE AMPLIFICATION OF SMALL ALTERNATING VOLTAGES BY ELECTRON TUBES [including Effect of Grid Current].—N. Vermes. (*Zeitschr. f. Physik*, 1934, Vol. 87, No. 9/10, pp. 647–658.)

A STUDY OF THE POSSIBILITIES OF RADIO-FREQUENCY VOLTAGE AMPLIFICATION WITH SCREEN-GRID AND WITH TRIODE VALVES.—Colebrook. (*See* under "Reception.")

OUTPUT POWER AND HARMONIC DISTORTION [especially in Pentodes].—Espley and Oliver. (*See* under "Acoustics and Audio-frequencies.")

LILLIPUT ULTRA-SHORT-WAVE VALVES.—W. Loest. (*Funktech. Monatshefte*, February, 1934, No. 2, pp. 62–63.) Based on Thompson's paper (Abstracts, 1933, p. 624: *see* also February, p. 94, r-h column).

SPECIAL VALVE FOR GENERATION OF MICRO-WAVES BELOW HALF AN INCH.—Cleeton and Williams (*See* abstract under "Miscellaneous.")

ULTRA-SHORT-WAVE TRANSMITTING VALVES WITH CONCENTRIC MULTI-SPIRAL GRIDS SHORT-CIRCUITED BY ONE OR MORE SUPPORTING STRAPS.—Te-Ka-De: Kohl and Pintsch. (German Pat. 561 324: *Funktech. Monatshefte*, February, 1934, No. 2, p. 83.) *See* also Abstracts, 1933, p. 450 (two) and January, p. 39.

THE MICRO-RADION VALVE USED IN THE LYMPNE/SAINT-INGLEVERT SERVICE.—(*See* abstract under "Stations, Design and Operation.")

NEW DESIGN OF 100-WATT TRANSMITTING VALVE [Gammatron 354: No Internal Insulators: No Getter: Tantalum Grid and Anode, the Latter Entirely Supported from Glass Envelope].—(*Electronics*, February, 1934, p. 61.)

THIS YEAR OF VALVES.—M. G. Scroggie. (*Wireless World*, 9th March, 1934, Vol. 34, pp. 164–166.)

NEW VALVES AT THE LEIPZIG FAIR.—E. Schwandt. (*See* reference under "Miscellaneous.")

Rhein's method of avoiding the 30 to 60 secs. heating-up delay in indirectly heated valves is mentioned: an initial heating voltage of some 7 volts is used and is switched over to the normal 4 volts by a thermal switch after about 10 secs.

VACUUM TUBE CHARACTERISTICS IN RELATION TO THE SELECTION OF COINCIDENT PULSES.—L. Fussell, Jr., and T. H. Johnson. (*Phys. Review*, 15th Feb. 1934, Series 2, Vol. 45, No. 4, p. 294: abstract only.)

TYPE 800 DATA [and Application as Class B Modulator].—(*Rad. Engineering*, February, 1934, Vol. 14, No. 2, pp. 15 and 24.)

DIRECTIONAL WIRELESS

ELIMINATION OF NIGHT EFFECT WITH A PULSE TRANSMITTER [Direct-Ray Received Pulse, viewed on Cathode-Ray Oscillograph Screen, employed for Indication of Bearing].—T. L. Eckersley. (*Marconi Review*, Jan./Feb. 1934, No. 46, pp. 12–16.)

For a similar application of the same principle *see* Watson Watt, Herd and Bainbridge-Bell, *The Cathode Ray Oscillograph in Radio Research*, p. 237. The horizontal movement of the electron ray is controlled by a thyratron synchronised with the pulse frequency of the transmitter: a row of signal peaks is thus obtained on the screen, representing the direct-ray signal and the various echoes. The bearing is determined by orienting the frame or goniometer until the direct-ray signal vanishes. This signal is easily identified, since it is the only one to remain constant in intensity for a given orientation, and the only one which gives a definite direction indication by vanishing at one particular orientation. A summary of test results is given. "The results show quite definitely that the scheme is workable. Even with the small frames at our disposal, directional measurements could be made down to field strengths at which the original longer-wave Adcock (900 m for aircraft work) was limited. . . . The chief drawback of the scheme is that the noise level . . . is necessarily high on account of the wide-band receiver used. This is required to give a faithful representation of the transients without overlapping." Even where (at 43 km) 10° errors did occur, these were probably instrumental, the bearings remaining constant during the worst night-effect conditions.

The wavelength used was around 150 m: pulses of about 1/3 millisecond were emitted regularly at 80–100 per sec. The tests showed that the direct-ray field intensity fell away approximately according to the Sommerfeld formula, the actual attenuation being slightly greater than the theoretical one, with $\sigma = 10^{-13}$ c.g.s. units. "It is of interest to note that in contrast to what has been previously observed, there are occasions when the reflected ray is right-hand circularly polarised."

SUR L'EMPLOI DES RELÈVEMENTS RADIOGONIOMÉTRIQUES À GRANDE DISTANCE (The Use of Long-Distance Radio Direction-Finding Bearings [Simple Procedure applicable to All Cases, including Long Distances where Givry Correction Methods cannot apply]).—F. La Porte. (*Comptes Rendus*, 29th Jan. 1934, Vol. 198, No. 5, pp. 447–449.)

FOREIGN INTEREST IN BUREAU'S RADIO AIDS TO AIR NAVIGATION [Bureau's Airway Radio-beacon Adopted by Other Countries].—Bureau of Standards. (*Journ. Franklin Inst.*, February, 1934, Vol. 217, No. 2, pp. 232–233.)

NAVAL DIRECTION FINDING, INCLUDING AN AUTOMATIC DIRECTION FINDER.—G. Shearing; J. F. Coales. (*See* abstract under "Miscellaneous"—Shearing.)

SOUNDINGS FROM A PLANE BY ACOUSTIC ECHO [French System].—(*Electronics*, February, 1934, p. 49.)

The siren sends a 1/100th sec. signal, simultaneously closing a transformer circuit and thus causing a neon tube to glow. The returning echo, after amplification, puts negative voltage into the neon-tube circuit and extinguishes the glow. Meanwhile a condenser has been charging up to a voltage depending on the lapse of time, and on the arrival of the echo this voltage is applied to the grid of a triode, the resulting change in anode current showing the altitude. An accuracy is claimed within 50 cm from 3 to 20 m and around 5% thence upwards. *Cf.* March Abstracts, p. 155, r-h column.

ACOUSTICS AND AUDIO-FREQUENCIES

AMPLIFIER UNITS [Microphones, Pick-Ups, Amplifiers and Loudspeakers] FIND NEW USES IN INDUSTRY.—(*Electronics*, February, 1934, pp. 34–36.)

Among more than 40 diversified uses are the following:—protection of safe-deposit and bank vaults; detecting leaks in water mains, fruit fly in oranges, shipworms in dock piling; diagnosis for watch and clock repairs; locating intestinal obstruction; testing quality of paper, leather, catgut, etc., by their bending "cry"; detecting surface faults in materials, testing machined surfaces; etc., etc. Various applications of loudspeakers include giving directions for the emergency landing of dirigibles.

SOME EXPERIMENTS UPON THE CARBON MICROPHONE.—D. N. Truscott. (*Journ. I.E.E.*, January, 1934, Vol. 74, No. 445, pp. 86–97.)

Of the six variables determining the output of a granular carbon microphone (amplitude and frequency of vibration; resistance, temperature and feed current of microphone; arrangement of granules) the effect of the last is very much less than has been supposed, being of the order of $\pm 10\%$ at 50 mA feed current and increasing with the latter. The curves obtained for the various factors are found to be constant for long periods of time, and therefore represent characteristics by which microphones may be compared. The experiments lead to the hypothesis that the action of the granules may be regarded as a simple make-and-break effect at each contact.

DYNAMIC MICROPHONE AMPLIFIER FOR SOUND NEWS RECORDING [Gain of 118 db: and the Steps taken to reduce Background Noise].—A. J. Sanial. (*Electronics*, February, 1934, p. 52.)

ÜBER DIE WIRKUNG KAPAZITIVER EINSTREUUNGEN BEI ELEKTROSTATISCHEN MIKROPHONEICHUNGEN (The Effect of Capacitive Stray Charges [producing Different Results according to the Polarity of Battery Connections] in the Calibration of Electrostatic Microphones).—W. Lange. (*Hochf: tech. u. Elek: akus.*, February, 1934, Vol. 43, No. 2, pp. 56–59.)

It was found experimentally that in calibrating a condenser microphone with auxiliary electrode the direction of the electrostatic fields had an effect on the reading of the indicating instrument. This result was traced to the action of stray charges introduced by capacitive effects between the two outer electrodes, the auxiliary and the fixed; these charges affect the microphone action according to the direction of their fields and to their phase. A second effect is produced by a capacitive transmission of the primary potential of the transformer leading to the note generator.

THE SOUND FIELD OF MEMBRANES AND DIAPHRAGMS. I. THE ANGULAR DISTRIBUTION OF THE SOUND PRODUCED BY A LARGE DIAPHRAGM. II. THE POWER EMITTED BY CIRCULAR MEMBRANES.—R. Ruedy. (*Canadian Journ. of Res.*, January and February, 1934, Vol. 10, Nos. 1 and 2, pp. 134–144 and 244–251.)

Analysis showing the two main differences between vibrating plate and rigid piston (set into an infinite wall) to be the much greater amplitudes in certain directions given by the former (for equal displacements) and its strong tendency to send the waves sideways instead of directly forward. A stretched membrane behaves in a somewhat similar manner, but certain differences are found. In Part II, accurate formulæ are presented showing the power radiated by a stretched circular membrane vibrating with small amplitudes and an arbitrary number of nodal circles or diameters.

NEW CONE LOUDSPEAKERS AT THE LEIPZIG FAIR [Corrugated Cone Diaphragm ("Nawi-Membran") preventing Parasitic Half-Frequency Vibrations at Large Volumes].—E. Schwandt. (*See* reference under "Miscellaneous.")

INVESTIGATION OF THE DIELECTRIC PROPERTIES OF SEIGNETTE [Rochelle] SALTS BY MEANS OF X-RAYS.—H. Staub. (*Helvet. Phys. Acta*, Fasc. 1, Vol. 7, 1934, pp. 3–45.)

THE MAGNETOSTRICTIVE OSCILLATION OF CHLADNI PLATES.—R. C. Colwell and E. A. Bryant. (*Phys. Review*, 15th Feb. 1934, Series 2, Vol. 45, No. 4, p. 291: abstract only.)

THE MARCONI-STILLE [Magnetic] RECORDING AND REPRODUCING EQUIPMENT.—N. M. Rust. (*Marconi Review*, January/February, 1934, No. 46, pp. 1–11.)

A MAGNETOSTRICTIVE PHONOGRAPH REPRODUCER, WITH DEMONSTRATIONS.—S. A. Buckingham. (*Phys. Review*, 15th Feb. 1934, Series 2, Vol. 45, No. 4, p. 291: abstract only.)

THE RECORDING OF SOUND ON GRAMOPHONE DISCS [Survey].—A. Chevallier. (*Génie Civil*, 10th March, 1934, Vol. 104, No. 10, pp. 221–224.)

BEHIND THE SCENES AT THE H.M.V. RECORDING STUDIOS.—(*Wireless World*, 2nd March, 1934, Vol. 34, pp. 143–144.)

SOUND REPRODUCTION PROGRESS [Survey of Past Year].—(*Wireless World*, 9th March, 1934, Vol. 34, pp. 169–170.)

QUALITY AND THE "TALKIES" [Recent Developments in Reducing Background Noise].—(*Wireless World*, 16th March, 1934, Vol. 34, pp. 189–190.)

L'ESAME MICROFOTOMETRICO DELLE "COLONNE SONORE" (The Microphotometric Examination of the Sound Track [in Sound-on-Film Records]).—G. Todesco. (*La Ricerca Scient.*, 15th Feb. 1934, 5th Year, Vol. 1, No. 3, pp. 139–152 and Plates.)

SHORT SURVEY OF PRESENT-DAY SOUND FILM [Sound-on-Film] TECHNIQUE, FROM THE STANDPOINT OF THE ELECTRO-ACOUSTICAL ENGINEER.—P. Kotowski and H. Lichte. (*Hochf.tech. u. Elek.akus.*, February and March, 1934, Vol. 43, Nos. 2 and 3, pp. 60–64 and 88–101.)

"RADIO PLAYHOUSE," NEW YORK [and the Demonstration of a Pick-Up with Wide Frequency Band: Change to 30–10 000 Cycle Band like "Removal of Several Intervening Curtains."].—Columbia Company. (*World-Radio*, 9th March, 1934, Vol. 18, No. 450, p. 334.)

DIE VERBESSERUNG DER AKUSTIK IN PRINZREGENTENTHEATER MÜNCHEN (The Improvement of the Acoustics in the Prince Regent Theatre, Munich [Investigation of Disturbing Echo and Reverberation Time of Theatre, and Installation of Absorbing Felt]).—W. Crone, H. Seiberth and J. Zenneck. (*Ann. der Physik*, February, 1934, Series 5, Vol. 19, No. 3, pp. 299–304.)

EMERGENCY ACOUSTIC TREATMENT OF THE WORLD'S LARGEST AUDITORIUM [Drill Hall] FOR SOUND PRESENTATION.—(*Electronics*, February, 1934, pp. 40–41 and 59.)

THE LOW-FREQUENCY AMPLIFIER WITH THE NEW [Glow-Discharge Tube] COUPLING.—Balzerowski: Stockhusen. (*See* under "Reception.")

STABILISED FEEDBACK AMPLIFIERS.—H. S. Black. (*Bell S. Tech. Journ.*, January, 1934, Vol. 13, No. 1, pp. 1–18.) *See* March Abstracts, pp. 155–156.

THE HARMONICS PRODUCED IN AMPLIFICATION BY VALVES. THE IDEA OF A "PURITY COEFFICIENT."—Baranov. (*See* under "Properties of Circuits.")

A NEW METHOD OF MEASURING DISTORTION [using Phase-Changing Device in combination with Gain Indicator and Valve Voltmeter].—S. S. Egert and S. Bagno. (*Rad. Engineering*, February, 1934, Vol. 14, No. 2, pp. 16–18.)

EIN NEUES NÄHERUNGVERFAHREN ZUR HARMONISCHEN ANALYSE (A New Approximate Method of Harmonic Analysis).—P. Terebesi. (*Archiv f. Elektrot.*, 15th March, 1934, Vol. 28, No. 3, pp. 195–200.)

Author's summary:—The integrals of the products of a periodic function $f(x)$ with suitable functions represented by rectangular curves are built up in a clear manner from the Fourier coefficients of $f(x)$. Conversely, the Fourier coefficients of $f(x)$ are obtained from the integrals by suitable calculation. These facts are utilised for three procedures for an approximate harmonic analysis of $f(x)$. The integrals may readily be determined either by (1) measuring certain ordinates of the integral curve for $f(x)$ or (2) using the planimeter. Or by utilising the connection between the Fourier coefficients of $f(x)$ and the derivative $f'(x)$, the harmonic analysis of $f(x)$ can be accomplished simply by (3) measuring and combining certain ordinates of $f(x)$ itself. The second procedure, using the ordinary planimeter for harmonic analysis, would appear particularly interesting, practical and convenient.

OUTPUT POWER AND HARMONIC DISTORTION [especially in Pentodes: Unfairly accused of Large Percentage of Third-Harmonic Distortion; etc.].—D. C. Espley and D. A. Oliver. (*Rad. Engineering*, February, 1934, Vol. 14, No. 2, pp. 11–14.) For correction see *ibid.*, March, 1934, p. 28.

THE "PHON" SCALE OF LOUDNESS [in Terms of Equivalent Loudness of 1 000 c/s Pure Tone, in Decibels above Audibility Threshold].—Espley and Oliver. (In paper referred to above: *see* also below.)

ZUR THEORIE DER SCHALLISOLATION VON WÄNDEN (Theory of the Acoustic Insulation of Walls).—A. Gemant. (*Zeitschr. f. Physik*, 1934, Vol. 87, No. 11/12, pp. 700–705.)

Author's summary:—A comparison is drawn between the two kinds of sound transmission through walls, (1) by flexural oscillations and (2) by conduction of sound. The theoretical equations for the insulation index are the same in the two cases, except for a numerical factor; the dependence on the mass of the wall and the frequency is also the same. The corresponding curves are simply displaced parallel to one another; the insulation for sound conduction is 14 to 20 "phons" higher [a "phon" is an acoustic unit of insulation, defined on the same lines as a decibel] which has no practical importance. The physical basis of this difference is that in flexural oscillations only a fraction of the whole mass of the wall oscillates, on account of the stationary waves, and so the effective weight of the wall is less.

SOUND INSULATION OF PLASTIC, LIQUID AND GRANULAR MATERIALS.—A. Gemant. (*Physik. Zeitschr.*, 15th Feb. 1934, Vol. 35, No. 4, pp. 167–171.)

The writer describes a method of measuring sound insulation using small plates of the material to be investigated; the method is applicable only for comparative measurements with different materials. The unit of insulation used is the "phon" (see preceding two abstracts). Plastic membranes are found to have about 1 phon better insulation than stiff membranes, while water and oil insulate up to 2 phons better than solid substances. Granular or powdered substances insulate about 2 phons better than connected materials.

OPEN-WIRE CROSSTALK.—A. G. Chapman. (*Bell S. Tech. Journ.*, January, 1934, Vol. 13, No. 1, pp. 19–58.)

"This paper gives a comprehensive discussion of the fundamental principles of crosstalk between open-wire circuits and their application to the transposition design theory and technique which have been developed over a period of years."

OPEN-WIRE [Broadcasting] PROGRAMME CIRCUITS [comparable in Performance with Cable Programme System for 35–8 000 c/s Band].—R. A. Leconte. (*Bell Lab. Record*, February, 1934, Vol. 12, No. 6, pp. 162–166.)

LINE FILTERS FOR OPEN-WIRE [Broadcasting] PROGRAMME CIRCUITS.—A. W. Clement. (*Ibid.*, pp. 167–169.)

RELEVÉ DES CARACTÉRISTIQUES D'UN FILTRE MÉCANIQUE (The Recording of the Characteristics of a Mechanical Filter).—Paolini. (*Ann. des P.T.T.*, January, 1934, Vol. 23, No. 1, pp. 51–62.) French version of the second paper dealt with in 1933 Abstracts, p. 627, r-h column.

ARRANGEMENT FOR THE AUTOMATIC CALCULATION OF NETWORKS OF IMPEDANCES: APPLICATION TO DIPOLE AND QUADRIPOLE ELECTRIC FILTERS [Methods also Useful for Electro-Acoustic Systems].—Abélès. (*See* under "Subsidiary Apparatus and Materials.")

A MECHANICAL WAVE MODEL ILLUSTRATING ACOUSTIC AND ELECTRICAL PHENOMENA [Band Pass Filter].—G. D. West. (*Proc. Phys. Soc.*, 1st March, 1934, Vol. 46, Pt. 2, No. 253, pp. 186–195.)

TRANSPORTATION-NOISE INTENSITIES [Motor Cars and Aeroplanes of Different Types, Trains, etc.].—(*Electronics*, February, 1934, p. 48.)

ON THE QUANTIC ABSORPTION OF SOUND IN GASES [for Audible Frequencies, in Air, may be Three Times that due to Viscosity and Thirty Times that due to Thermal Conductivity].—Y. Rocard. (*Comptes Rendus*, 26th Feb. 1934, Vol. 198, No. 9, pp. 802–803.)

ÜBER DIE WIRKUNG ULTRAAKUSTISCHER SCHWINGUNGEN AUF PHOTOGRAPHISCHE EMULSIONEN (The Action of Supersonic Oscillations on Photographic Emulsions [Improvement in Homogeneity and Stability: Power of Increasing the Silver-Halogen Concentration: Resolving Power Heightened by Prevention of Grain Agglomeration: General Sensitivity Improved]).—B. Claus. (*Zeitschr. f. tech. Phys.*, No. 2, Vol. 15, 1934, pp. 74–78.)

ABSORPTION OF SUPERSONIC WAVES IN MIXTURES OF AIR AND CARBON DIOXIDE AT DIFFERENT RELATIVE HUMIDITIES.—H. H. Rogers. (*Phys. Review*, 1st Feb. 1934, Series 2, Vol. 45, No. 3, pp. 208–211.)

EXPERIMENTS ON THE DIFFRACTION OF LIGHT BY SUPERSONIC WAVES [leading to a Method of Measuring the Velocity of the Latter].—P. Debye, H. Sack and F. Coulon. (*See* under "Propagation of Waves.")

DIE SICHTBARMACHUNG STEHENDER ULTRASCHALLWELLEN IN FLÜSSIGKEITEN UND EINE NEUE METHODE ZUR BESTIMMUNG DER ULTRASCHALLGESCHWINDIGKEIT (Making Standing Supersonic Waves in Fluids Visible, and a New Method for Determining the Supersonic Velocity).—C. Bachem, E. Hiedemann and H. R. Asbach. (*Zeitschr. f. Physik*, 1934, Vol. 87, No. 11/12, pp. 734–737.) *See* also April Abstracts, p. 214, l-h col., and next reference.

DIE SICHTBARMACHUNG FORTSCHREITENDER ULTRASCHALLWELLEN IN FLÜSSIGKEITEN MITTELS EINES HOCHFREQUENZSTROBOSKOPS UND EINE NEUE METHODE ZUR BESTIMMUNG DER ULTRASCHALLGESCHWINDIGKEIT IN FLÜSSIGKEITEN (The Use of a High-Frequency Stroboscope to Render Visible Progressive Supersonic Waves in Liquids, and a New Method for Determining the Supersonic Velocity in Liquids).—C. Bachem. (*Zeitschr. f. Physik*, 1934, Vol. 87, No. 11/12, pp. 738–740.) *See* also above.

SUPERSONIC CARRIER WAVES IN AIR [Music already carried ½ Mile by 20–80 kc/s Air Waves: Harvard Experiments].—G. W. Pierce. (*Electronics*, February, 1934, p. 57.)

A SUPERSONIC POWER JET WITH HIGH VELOCITY COEFFICENT.—L. Santon. (*Comptes Rendus*, 22nd Jan. 1934, Vol. 198, No. 4, pp. 334–336.)

PHOTOTELEGRAPHY AND TELEVISION

THE STIXOGRAPH AND SCOPHONY: FIRST AND EXCLUSIVE DETAILS.—G. W. Walton. (*Television*, March, 1934, Vol. 7, No. 73, pp. 93–96 and 134.)

The writer's "Scophony" System (*see* Sagall, March Abstracts, p. 159) gets rid of scanning (which is "not essential to television and has introduced all the greatest difficulties") by converting the two-dimensional picture into a "stixograph"—a "line" or "one-dimensionally limited" picture—from which, after transmission, it is converted back into the normal two-dimensional picture intelligible to the human eye. In his preliminary explanation the writer shows how a cylindrical lens focuses a point as a line image parallel to the axis of curvature: several points, in a line parallel to this axis, are focused into one line in the image plane, and a considerable portion (*A*, in Figure 2) of that line is a true integration of all the points. Several points lying in a line *not* parallel to the axis of curvature would be focused as an equal number of lines parallel to each other and to the axis. Several points arranged irregularly would be focused as a number of lines parallel to each other and to the axis, but if two or more points lay in a line parallel to the axis, they would form only one integrated image line.

The stixograph optical system essentially resembles the combination of such a cylindrical lens with a second cylindrical lens having its axis of curvature at right angles to that of the first: this second lens, however, takes the form of an echelon produced by laminating a cylindrical lens in planes normal to the axis of curvature and displacing the laminations transversely to the optical axis, so that each cylindrical-lens lamination has an independent optical axis through the first ("object") lens to the object viewed. Owing to the action of the object lens, each lamination receives light only from an individual strip of the object (horizontal, if the axis of the object lens is horizontal) and the image formed by it consists of parallel vertical lines representing the details in that strip. With proper dimensioning, and suitable horizontal displacement of the laminations to form the echelon, the images of the various

laminations do not overlap: the total image is a stixograph of the object, all vertical definition having been removed and only horizontal definition remaining. Each detail of the image has an individual and independent position horizontally, and its size corresponds to the size horizontally of the detail it represents in the object. The *vertical* size or position of a detail in the stixograph has no significance. The paper is to be continued. *See* also below.

TELEVISION ON LONG WAVES [using the Stixograph Principle of the Scophony System, and Pulses of Frequency around 300 kc/s fed to Transmitting Aerial, Increasing Illumination producing Pulse of Opposite Phase to that due to Decreasing Illumination: No Effect on Ordinary Receivers].—G. W. Walton. (British Pat. 403 395: *Television*, March, 1934, Vol. 7, No. 73, pp. 115–116.) *See* also above.

NOTE SUR UNE SOLUTION PROVISOIRE DU PROBLÈME DE LA TÉLÉVISION: LE TRANSMISSION AU RALENTI (Note on a Provisional Solution of the Television Problem: Retarded Transmission [Reduction of Wave-Band by Radio Transmission from a Slowed-Down Film or Magnetic Record]).—B. Kwal. (*L'Onde Élec.*, December, 1933, Vol. 12, No. 144, pp. 577–579). *Cf.* Thurm, 1929 Abstracts, p. 335.

ZUR FREMDSTEUERUNG DER STRAHLBEWEGUNG BEIM FERNSEHEN MIT BRAUNSCHEN RÖHREN (On the Distant Control of the Traversing Motion in Cathode-Ray Television [Local "Kipp" Oscillations under Complete Control of Line-Change and Framing Signals]).—M. von Ardenne. (*Zeitschr. f. tech. Phys.*, No. 2, Vol. 15, 1934, pp. 62–64.)

The common method, according to which the independent kipp oscillations at the receiver are merely kept in synchronism with the corresponding transmitter frequencies by means of the "pull in" effect, has many disadvantages and only the single advantage that when the transmitter stops working the ray at the receiver continues to traverse, so that the screen is not burnt. On the other hand, the principle of transmitting the kipp potentials direct from transmitter to receiver, whatever method may be used (*cf.* von Okolicsanyi, March Abstracts, p. 157), has its own disadvantages, particularly for velocity-modulation systems.

The writer states that all these disadvantages are avoided, and the advantages of direct kipp-voltage transmission obtained, if the kipp oscillations at the receiver are put under the complete control of the transmitter. Fig. 1 shows a simple way of doing this. "The short-period impulses at the end of each line and the long-period impulses at the completion of each picture are taken to the two-tube [triode and diode] circuit shown, and produce momentary positive potentials on the grid of the 'discharge' triode *E*. For a correct choice of the kipp condenser *C* and the valve *E* the discharge of *C* follows after an interval which is only a small fraction of the duration of a kipp period. The process of the distant control of the kipp instant is especially simple with the German P.O. experimental television transmitters now under construction. In these the synchronising impulses are produced, as suggested by Schriever [1933 Abstracts, p. 630, r-h col.], by suppressing, at the end of each line and of each frame, a fixed residue of carrier which is maintained throughout each line. The Schriever method not only produces at the receiver the voltage form shown in Fig. 1 [narrow rectangular peaks rising from a line slightly on the negative side of zero to a much larger positive value] but also enables the transmitter power to be used almost to the full for picture modulation. An additional advantage is that the fluorescent spot is darkened automatically during the kipp return. This means, for the kipp process in the line [horizontal] direction, an increase in the possible contrast interval, and for the kipp process in the vertical direction the elimination of the optically interfering return line of the luminous spot.

"If the discharge of the kipp capacity is externally controlled by the synchronising signal, the cathode ray at the receiver must follow the scanning at the transmitter rigidly and in a stable manner. The adjustment of the extremely simple kipp device consists only in the regulation of the charging current, by which the picture size can be brought to the desired dimensions without upsetting the synchronisation: thus it is possible, merely by adjusting the charging current, to have a small picture of great brightness for the day-time and a large, less bright picture for observation in the dark.

"A suitable choice of the d.c. voltage in the charging circuit allows the ray to be deflected, whenever the transmitter stops and there is no control signal, right outside the image area and (if desired) on to a guard electrode, so that any burning of the screen is avoided . . . ." If multiple-grid valves are used for the charging of the kipp capacity, the supply can be taken from an unstabilised or only moderately stabilised mains adaptor.

DER KATHODEN-OSZILLOGRAPH MIT KALTER KATHODE ALS FERNSEHEMPFÄNGER (The Cold-Cathode Cathode-Ray Oscillograph as Television Receiver).—W. Schutz. (*Archiv f. Elektrot.*, 15th March, 1934, Vol. 28, No. 3, pp. 183–194.)

Since the cold-cathode tube is very many times superior to the hot-cathode tube as regards spot brightness, its conversion to a form suitable for television reception is very desirable for the projection of pictures in public halls. The present paper deals with researches (ended 2 years ago) in this direction on cold-cathode tubes of the Aachen type (*see*, for instance, Beyerle, 1931 Abstracts, p. 396, l-h column). The results showed that such a tube can be made perfectly satisfactory for television by a suitable re-design, particularly of the blocking chamber (between the pre-concentrating and main concentrating coils), with its two screens and its two sets of deflecting plates, where the process of intensity modulation takes place. The design and arrangement of these plates is seen in the diagram to the right of Fig. 1: the earthed plates of each pair are combined and

connected permanently to the chamber wall, so that only two leads emerge. The usual two pairs of traversing plates lie in the space between the main concentrating coil and the fluorescent screen.

The only objection to the tube is the higher voltage required, both for excitation (40 kv) and for modulation: this, however, means only a greater outlay in apparatus, and should not stand in the way of the use of a television receiver with such powers of projection.

DIE KATHODENSTRAHLRÖHREN VON ZWORYKIN FÜR FERNSEHZWECKE (Zworykin's Cathode-Ray Tubes [Iconoscope and Kinescope] for Television).—W. Heimann: Zworykin. (*Funktech. Monatshefte*, February, 1934, No. 2, Supp. pp. 9–11). Based on the I.E.E. paper dealt with in February Abstracts, p. 101, l-h column.

DISCUSSION ON "TELEVISION WITH CATHODE-RAY TUBES" [Efficiency of Iconoscope limited by Present Low Dynamical Sensitivity of the Mosaic: Suggested Applications of Television apart from Entertainment].—Zworykin. (*Journ. I.E.E.*, March, 1934, Vol. 74, No. 447, pp. 276–277.) Discussion on the paper dealt with in February Abstracts, p. 101, l-h column.

EXPERIMENTAL WORK IN CATHODE-RAY TELEVISION [Report of Lecture].—Edison Swan Company. (*Television*, February, 1934, Vol. 7, No. 72, pp. 73–74.) *See* also Parr and Price, April Abstracts, p. 214, r-h column.

VELOCITY MODULATION [the Cossor Company's System].—Bedford and Puckle. (*Television*, March, 1934, Vol. 7, No. 73, pp. 107–109 and 132.) Long summary of the I.E.E. paper: *see* also April Abstracts, p. 214, two.

TELEVISION AT THE PHYSICAL SOCIETY EXHIBITION [including the Byron Test-Film Apparatus and the Gardiner Receiving System].—D. H. Byron: E. L. Gardiner. (*Television*, February, 1934, Vol. 7, No. 72, pp. 57–58.) *See* also Abstracts, 1933, p. 399, r-h col., for a test-film device: and March, p. 159, for Gardiner's system.

BROADCAST TELEVISION.—(*Wireless World*, 2nd March, 1934, Vol. 34, pp. 146–147.)

An article putting forward reasons why the B.B.C. should continue the existing 30-line television transmissions. At the same time, the present transmissions are criticised on the grounds that the number of picture elements is too many for the frequency band available, and suggestions are made concerning programme matter more suited to the limitations of the transmissions.

THE CASE FOR HIGH DEFINITION [and against Further 30-Line Development].—O. S. Puckle: Sagall. (*Television*, February, 1934, Vol. 7, No. 72, pp. 78 and 80.) Opposition to Sagall's plea for the continuation of 30-line transmissions (March Abstracts, p. 159). For a letter disputing Puckle's statements, from Wikkenhauser, see *ibid.*, March, 1934, pp. 119–120.

FERNSEHÜBERTRAGUNGEN MITTELS DRAHTLEITUNGEN (Television Transmission by Overhead Lines and Cables [for Linking-Up the Local Ultra-Short-Wave Services of Various Large Towns]).—F. Kirschstein and J. Laub. (*Funktech. Monatshefte*, February, 1934, No. 2, Supp. pp. 1–4.)

Referring to the suggestion to link up the ultra-short-wave television services of various large towns by means of a series of u.s.w. beam transmitters acting as relay stations, on special towers at intervals of 50–100 km, the writers point out that apart from the cost of such a plan there would not be enough carrier wavelengths to spare: in the broadcast band a spacing of 9 kc/s is wide enough, but with u.s.w. transmissions, owing to the higher frequencies and smaller receiver selectivities, a frequency difference of about 5 to 10% of the carrier frequency is necessary. The German P.O. has therefore been investigating the possible ranges, for such a purpose, obtainable by the use of land lines and cables: although these researches are by no means completed, some of the conclusions already reached are discussed in the present paper.

A carrier frequency of the order of 1 000 kc/s is desirable for optical reasons: the modulation of this carrier by the picture current would give a frequency band stretching from about 500 kc/s to 1 500 kc/s. But experiment has shown that the transmission of the upper sideband can be omitted without loss of image quality, so that the band need only be from 500 to 1 000 kc/s. Fig. 1 shows the calculated and observed attenuation of such frequencies over an overhead line (this is taken from the writers' paper on carrier-current telephony—*see* March Abstracts, pp. 159–160): at 1 000 kc/s the attenuation is 0.052 neper/km. Fig. 2 gives the experimental results with a subscriber's cable: here the attenuation increases approximately linearly with the frequency, instead of in parabolic manner: at 1 000 kc/s the value is 1.8 neper/km, but with thicker conductors this would be reduced to 0.7 or 0.8. A special tube-and-wire high-frequency cable brings the value down to only 0.3 neper/km, but has both structural disadvantages and an electrical asymmetry rendering it very susceptible to interference troubles.

A table is given showing the lengths of repeater sections, for overhead line, subscriber's cable, twisted-pair cable, and high-frequency cable, for television transmissions of 180 lines and 25 frames/sec., assuming certain values for the permissible section-attenuation. These repeater-section lengths range from 4 km and 30 km (subscriber's cable and high-frequency cable, respectively) to 115 km (overhead line, 4 mm). These values, which are only rough indications, suggest that even the special h.f. cable would only be suitable for comparatively short ranges, whereas the overhead wire gives promise of much longer ranges. As regards the danger of these lines picking up unwanted broadcast radiation, the writers point out that a closely spaced, suitably crossed pair of overhead wires picks up very little radiation, and that the receiver can be so connected that it is affected by the potential between the two wires and not by that between wire and earth.

APPARATUS FOR TRANSMISSION OF PHOTOGRAPHS [Marconi Facsimile Equipment].—Marconi Company. (*Engineering*, 16th Feb. 1934, Vol. 137, No. 3553, pp. 203–204.)

THE STANDARD TELEVISION RECEIVER [Special Double Band-Pass Tuning: nearly 4 Watts Output].—S. R. Wilkins. (*Television*, February, 1934, Vol. 7, No. 72, pp. 53–55 and 86.) For a modification, embodying an additional r.f. stage, see *ibid.*, March, 1934, pp. 122 and 124.

MODERN FORMS OF KERR CELL: THE DOUBLE-IMAGE POLARISCOPE [and Its Use with the Wilson Scanning System].—H. A. Hankey: Myers. (*Television*, March, 1934, Vol. 7, No. 73, pp. 110–111 and 134.) *See* also Abstracts, 1933, p. 106: and February, p. 101, r-h column.

THE CHARACTERISTICS OF MERCURY LAMPS [Tubes for Sound Recording and Their Usefulness in Television].—J. Sieger: G.E.C. (*Television*, March, 1934, Vol. 7, No. 73, pp. 100–101 and 102.)

GAS-DISCHARGE LAMPS [Neon and Mercury-Vapour].—W. J. Nobbs. (*Television*, February, 1934, Vol. 7, No. 72, pp. 48–49 and 50.)

THE CHARACTERISTICS OF THE SODIUM LAMP AS INFLUENCED BY VAPOUR PRESSURE.—G. R. Fonda and A. H. Young. (*Journ. Opt. Soc. Am.*, February, 1934, Vol. 24, No. 2, pp. 31–34.)

ÜBER DIE SPERRSCHICHT AM BLEISULFID (The Barrier Layer in Lead Sulphide).—F. Heineck. (*Physik. Zeitschr.*, 1st Feb. 1934, Vol. 35, No. 3, pp. 113–118.)

The effect of the gases H_2, O_2, N_2, CO_2 and H_2S and the vapours of water, benzole, acetone and methanol on the rectifying action of (twice) sublimated PbS was the subject of the investigation here described. Only the vapours of the liquids mentioned gave rise to a barrier effect; pure PbS gave no rectification and the action of the gases was very weak, vanishing in a vacuum. The presence of an adsorbed layer of a foreign substance on the surface of the PbS was necessary for any rectifying action to occur. The chemical nature of the foreign substance appears to have no influence, provided that it is a worse conductor than the PbS and is well adsorbed by it. Chemical changes at the surface might however have the same effect as an adsorbed layer. No connection was found between rectifying action and contact potential. For other papers on these lines *see* Abstracts, 1930, p. 470 (Vrede); 1931, p. 279 (Siemens and Demberg) and 451 (Schottky and others).

SUR LES TENTATIVES D'APPLICATION DES LOIS DE L'EMISSION PHOTOÉLECTRIQUE AUX PHOTO-ÉLÉMENTS À COUCHE D'ARRÊT (On the Attempts to Apply the Laws of Photoelectric Emission to Barrier-Layer Photocells).—G. Liandrat. (*Comptes Rendus*, 12th March, 1934, Vol. 198, No. 11, pp. 1028–1030.)

Experiments with monochromatic illumination throwing new light on the results of Körösy and Selényi and of Wood (Abstracts, January, p. 46, l-h column: 1933, p. 631, l-h column: *see* also von Auwers and Kerschbaum, 1931, p. 103).

THE ILLUMINATION-RESPONSE CHARACTERISTICS OF VACUUM PHOTOELECTRIC CELLS OF THE ELSTER-GEITEL TYPE.—J. S. Preston and L. H. McDermott. (*Proc. Phys. Soc.*, 1st March, 1934, Vol. 46, Pt. 2, No. 253, pp. 256–276.)

EMPLOI DES CELLULES À VIDE POUR LA COMPARAISON DES FLUX LUMINEUX PEU INTENSES (The Use of Vacuum Photocells [particularly Caesium Cells] for the Comparison of Feeble Luminous Fluxes [and an Anomaly at 80 Volts]).—L. Capdecomme. (*Comptes Rendus*, 29th Jan. 1934, Vol. 198, No. 5, pp. 462–464.)

The makers' specified working potential is 70 v. Around 80 v there is a sudden rise of current, for constant flux, which may upset measurements. But for potentials above 150 v the cells give a very good comparison of weak fluxes, provided these are applied in quick succession and on the same part of the cathode surface. Thus used, the cells are greatly superior to gas-filled cells; their sensitivity remains independent of variations of accelerating potential and is not reduced by the use of high amplification resistances. The currents are exactly proportional to the incident fluxes.

REMARKS ON THE COMPARISON OF THE PROPERTIES OF VACUUM AND GAS-FILLED PHOTOELECTRIC CELLS.—G. A. Boutry and J. Orcel: Capdecomme. (*Comptes Rendus*, 26th Feb. 1934, Vol. 198, No. 9, pp. 808–810.)

Prompted by Capdecomme's paper dealt with above, and in particular contradicting his statement that gas-filled cells cannot give currents proportional to the incident flux, even if the latter is very small. The danger of deterioration, if the high voltages he recommends are used with complex caesium cathodes, is also pointed out.

NEW OBSERVATIONS ON THE SELECTIVE SPECTRAL PHOTOELECTRIC EFFECT AT LOW TEMPERATURES.—R. Suhrmann and D. Dempster. (*Physik. Zeitschr.*, 15th Feb. 1934, Vol. 35, No. 4, p. 148.)

The writers have used a sensitive selective photocell of the type already described by Suhrmann (1931 Abstracts, p. 333, l-h col.) with small traces of naphthalene on a potassium surface, the naphthalene being covered by an alkali layer of atomic thickness. At the temperature of liquid air, the selective maxima described in the paper referred to above became much smaller; the light of the part of the spectrum between them had no effect. The light of the short-wave maximum had a lowering effect on the sensitivity at the long-wave maximum, while the sensitivity at the short-wave maximum was unchanged by irradiation with light of the frequency of the long-wave maximum. The usual sensitivity curve returned when the cell was warmed up to room temperature. A short explanation of the phenomenon is given.

ON THE RELATIVISTIC PHOTOELECTRIC EFFECT [Theoretical Calculation].—H. Hall. (*Phys. Review*, 1st Feb. 1934, Series 2, Vol. 45, No. 3, pp. 216–217.)

INFLUENCE OF THE INTENSITY OF THE LIGHT ON PHOTO-VOLTAIC PHENOMENA.—R. Audubert and G. Lebrun. (*Comptes Rendus*, 19th Feb. 1934, Vol. 198, No. 8, pp. 729–731.)

THE DETERMINATION OF THE EXTERNAL WORK FUNCTION W_a [by Electron Diffraction Experiments: Theoretical Investigation].—F. Rother and H. Bomke. (*Zeitschr. f. Physik*, 1934, Vol. 87, No. 11/12, pp. 806–809). *See* also January Abstracts, p. 41.

PHOTOELECTRIC MEASUREMENTS OF THE TRANSMISSION OF FLUORITE IN THE SCHUMANN REGION [between 1 600 and 1 235 A.U.].—W. M. Powell, Jr. (*Phys. Review*, 1st Feb. 1934, Series 2, Vol. 45, No. 3, pp. 154–157.)

ÜBER DIE LICHTABSORPTION DER METALLE (The Absorption of Light by Metals [Absorption Constant measured Photoelectrically in Region 186 to 700 mμ].—A. Smakula. (*Zeitschr. f. Physik*, 1934, Vol. 88, No. 1/2, pp. 114–126.)

MEASUREMENTS AND STANDARDS

BERECHNUNG VON HOCHFREQUENZSPULEN NACH IHREN VERLUSTEN (The Design Calculation of High-Frequency Coils [Stranded-Wire, for Transmitters] according to Their Losses).—H. Gönningen: Lorenz Company. (*E.T.Z.*, 22nd Feb. 1934, Vol. 55, No. 8, pp. 190–192.)

In the tests on which this paper is based, the following factors were kept constant:—cylindrical shape, ratio of diameter to length (1 : 1.7), nature of conductor (h.f. stranded wire of 0.07 mm enamelled strands, concentric six-fold stranding, double cotton braided), and the method of winding (turn to turn; for multi-layer coils, non-capacitive winding). The dependent and independent variables were thus the diameter (and consequently the length) of the coil, the total radial depth of the winding, the wavelength, and the specific loss. Although the investigations were limited in this way, "some of the lessons derived from them were so surprising that even the workers themselves could not accept them at first," and they should be of the greatest value in the design of coils.

First of all a number of coils of equal diameter (and therefore of equal length), and with radial winding depths ranging from 1 to 17 mm, had their specific losses measured by the oil calorimeter procedure of Pungs and Preuner, for wavelengths ranging from 160 to 40 000 m. The results are given in Fig. 1, which shows that every winding depth has its optimum wavelength, and conversely *every wavelength has, for a given coil size, its optimum winding depth*: moreover, the specific losses at these optimum points are practically equal. Thus for litz wires of 2 and 17 mm diameter there is a departure of only 10% from the average value of the two. For practical purposes, therefore, one may say that coils of the same diameter *have equal losses at their optimum wavelengths*. The old idea that the specific loss depends on the number of turns or self-induction is wrong: it does not matter, as regards losses, how the individual conductors run. The radial winding depth is the important factor, and in the smaller coils the distribution of the available winding space thus given, between the number of turns necessary for the required inductance, often leads to the use of several layers, non-capacitively wound. In larger coils, as a rule, it is best to choose the wire diameter to equal the optimum winding depth. Several wires may be used in parallel: Fig. 5a shows a winding of three unbraided wires in parallel with each other and with one braided wire, so that the latter acts as insulation between each composite "turn" and the next. Fig. 5b shows another quadruple winding, all four wires being unbraided and the "turns" being separated by string: this gives excellent cooling, low capacity and high insulation between turns.

The procedure for the design calculation of such a coil is therefore as follows: (1) the dimensions of the bobbin are determined from Fig. 3, which gives the relation between diameter (20 to 600 mm) and losses, for the optimum winding depth; (2) calculation of maximum temperature T from the power loss and coil surface; (3) choice of optimum winding depth from Fig. 2, which gives these depths, for the various diameters, over a wave-range of 0.1 to 10 km; (4) calculation of the number of turns from the coil data and the required inductance (Fig. 4); and (5) distribution of the available winding space between the necessary turns. The following formulae express the bases of the calculation:—the specific loss $v = c/D$, where c is a constant and D the coil diameter: see Fig. 3; the optimum winding depth $h = c_1\lambda/D$: see Fig. 2; the minimum necessary diameter for cooling $D = \sqrt{\text{power loss}/c_2 \times 1.7 \times \pi}$, where $c_2 = f(T)$; and the number of turns $n = \sqrt{2L/DQ}$, where L is the inductance in cm and Q is a variable factor found from Fig. 4.

THEORETICAL TREATMENT OF SINGLE- AND MULTI-LAYER COILS IN ANY TYPE OF CIRCUIT [yielding Equations for Calculation of Currents, Voltages and Natural Frequencies].—Zuhrt. (*See* under "Properties of Circuits.")

THE MEASUREMENT OF THE INDUCTANCE OF IRON-CORED CHOKES CARRYING DIRECT CURRENT.—E. O. Willoughby. (*Proc. Phys. Soc.*, 1st March, 1934, Vol. 46, Pt. 2, No. 253, pp. 292–299.)

CONTRIBUTION TO THE MEASUREMENT OF THE SELF-INDUCTANCE OF COILS WITH MAGNETIC CORES [Method using only an Ammeter, Voltmeter and Calibrated Non-Inductive Resistances: Examples, with Calculation of Accuracy].—H. Pécheux. (*Rev. Gén. de l'Élec.*, 24th Feb. 1934, Vol. 35, No. 8, pp. 235–239.)

A SELF-CONTAINED BRIDGE FOR MEASURING BOTH INDUCTIVE AND CAPACITIVE IMPEDANCES.—H. T. Wilhelm. (*Bell Lab. Record*, February, 1934, Vol. 12, No. 6, pp. 181–184.)

PORTABLE FREQUENCY METERS [with "Controlled Sensitivity"].—(*Bull. Soc. Franç. Radio-Élec.*, October/November/December, 1933, Vol. 7, No. 5, pp. 106–112.)

MARCONI PRECISION MODULATED RADIO-FREQUENCY GENERATOR AND ATTENUATOR TYPE 487.—Marconi Company. (*Marconi Review*, January/February, 1934, No. 46, pp. 17–25.)

A companion model to the unmodulated instrument referred to in 1933 Abstracts, p. 110, l-h col. Any depth of modulation up to 80% is possible. The carrier scintillation or "wobble" at 80% modulation is negligible at carrier frequencies less than 3 Mc/s and at 20 Mc/s does not exceed 1 000 cycles.

THE M.G.8A FREQUENCY METER.—Marconi Company. (*Marconi Review*, January/February, 1934, No. 46, pp. 26–28.) Completion of the article dealt with in March Abstracts, p. 162, l-h column.

THE MAGNETOSTRICTIVE OSCILLATION OF CHLADNI PLATES.—R. C. Colwell and E. A. Bryant. (*Phys. Review*, 15th Feb. 1934, Series 2, Vol. 45, No. 4, p. 291 : abstract only.)

INVESTIGATION OF THE DIELECTRIC PROPERTIES OF SEIGNETTE [Rochelle] SALTS BY MEANS OF X-RAYS.—H. Staub. (*Helvet. Phys. Acta*, Fasc. 1, Vol. 7, 1934, pp. 3–45.)

THE TECHNICAL ARRANGEMENTS OF THE QUARTZ CLOCKS OF THE PHYSIKALISCH-TECHNISCHE REICHSANSTALT.—A. Scheibe and U. Adelsberger. (*Hochf:tech. u. Elek:akus.*, February, 1934, Vol. 43, No. 2, pp. 37–47.)

The circuit and design principles of these clocks were dealt with shortly in a previous paper (1933 Abstracts, p. 109) where, however, details were not given since a prolonged trial was necessary before the success of the equipment could be gauged. About a year after clocks I and II were put into commission, III and IV were set in continuous working, and a 9-months' daily comparison of the four clocks indicates that the design has reached its practically final state. The present paper, therefore, gives full details of the equipment. The quartz oscillators in the I/II group are different from those in III/IV group, but since it has been impossible to decide which design is the better a description of each is given. In both types a bar of rectangular cross section is used, but in the first type it is cut in orientation I (length parallel to Y axis, breadth to optical axis, thickness to X axis) and excited to longitudinal vibrations by two pairs of electrodes, the gaps being about 0.5 mm ; in the second type (of orientation II) the section is square, and use is made of the discovery that with such a bar a vanishingly small temperature coefficient is obtained if the ratio of the length of side of cross section to the elastic half-wavelength is about 0.25. Longitudinal vibrations are excited by a long central electrode and two commoned short electrodes at the ends, all of square tubular form : the gaps are 1 mm. Thus the quartz oscillators of the III/IV group differ from those of I/II group in mass (ratio 29/1), in temperature coefficient (ratio 1/100), in their cut and in their electrode arrangements. These differences should make the two types react differently to various known or unknown external influences, mechanical, thermal or electrical, and may well lead to information useful for counteracting such influences.

In spite of the extremely small temperature coefficient of the III/IV quartz oscillators, the double-thermostat principle of the I/II group is still applied and the constructional details actually improved. The careful design of the equipment is illustrated by the description of the special grid lead, from the quartz oscillator to the master oscillator, for which complete screening against stray fields, constant capacity and small heat conduction are necessary (Fig. 10). Among the various parts of the equipment described and illustrated are the thermostat control arrangements (using contact thermometers) and the heterodyne apparatus for measuring and recording (by counter or m.c. recorder) the deviations between two of the clocks : the wave-form-changing amplifier shown in Fig. 17 is used to make the slow heterodyne frequency (of the order of 1.5 c/s) of suitable wave form to work the stylus of the recording apparatus. For previous papers on the subject *see* also Abstracts, 1933, p. 633, and February, p. 105.

A NEW THERMAL PRINCIPLE OF MEASUREMENT [Ultra-Micrometer Method depending on Varying Gap between Bolometer Strip and Cold Heat-Conducting Edge : Application to Electrometer and Meter for Weak D.C. Magnetic Fields].—K. H. Reiss. (*Zeitschr. f. tech. Phys.*, No. 2, Vol. 15, 1934, pp. 83–85.)

In electrometer form the device was used with a pointer galvanometer of sensitivity 10^{-5} A/scale-division, and the relation between indicated current and the distance of bolometer strip from cold edge is shown in Fig. 3 : for a gap of 0.8 mm the current was below 10×10^{-5} A, while for a gap of 0.1 mm it rose to about 60×10^{-5} A. As a meter for magnetic fields, with the same galvanometer, the sensitivity was about 100 oersted/scale-division: with a mirror galvanometer this increased to 0.1 oersted/scale-division.

SUR UN PROPRIÉTÉ DES LAMPES TRIODES (A Property of Triode Valves [Grid/Cathode Current controlled by Retarding Potential on Anode : Use for Measurements on High-Resistance Generators such as Photocells and Crystals]).—A. de Gramont and D. Beretzki. (*Comptes Rendus*, 29th Jan. 1934, Vol. 198, No. 5, pp. 413–414.)

A milliammeter in the grid/cathode circuit of an indirectly heated triode shows a current when no auxiliary potential is applied to grid or anode, the only energy being furnished by the heating of the cathode. The gradual application of a negative potential to the anode retards the electrons so that this grid/cathode current first decreases and finally vanishes. As a circuit for dealing with the voltages from generators of high internal resistance, the great advantage of such an arrangement is that, since the electrons do not reach the anode, the anode/cathode space presents a very high resistance, of the same order as that of the generator, so that the phenomena under examination control the meter current without being changed by it.

Thus with an ordinary photocell fluxes smaller than 10^{-6} lumen may be detected, while a piezo-electric plate used as a microphone gives readily amplifiable currents. The circuit of Fig. 3 enables a sensitive meter to be used: a second triode is connected in opposition to the first so as to annul the permanent grid/cathode current. One plate is kept at a fixed potential (in the diagram it is earthed), the other is employed for the measurement, changes in its potential producing dis-equilibrium which is indicated by the milliammeter.

THE INHERENT POWER FACTOR OF AIR CONDENSERS AND THE LIMITS OF POWER-FACTOR BRIDGE MEASUREMENTS.—J. C. Balsbaugh. (*Phys. Review*, 15th Feb. 1934, Series 2, Vol. 45, No. 4, p. 286: abstract only.)

THE DIELECTRIC COEFFICIENTS OF GASES.—PART II. THE LOWER HYDRIDES OF CARBON AND SILICON, OXYGEN, NITROGEN, OXIDES OF NITROGEN AND CARBON, AND FLUORIDES OF SILICON AND SULPHUR.—H. E. Watson, G. Gundu Rao, and K. L. Ramaswamy. (*Proc. Roy. Soc.*, 1st Feb. 1934, Vol. 143, No. A 850, pp. 558–588.) For reference to Part I *see* 1931 Abstracts, p. 607, r-h column.

MEASURING THE RESISTANCE OF BROADCAST ANTENNAS [by Resistance or Reactance Variation Method or Substitution Method].—S. Helt. (*Electronics*, February, 1934, pp. 45–47.)

A NEW METHOD OF MEASURING DISTORTION [using Phase-Changing Device in combination with Gain Indicator and Valve Voltmeter].—S. S. Egert and S. Bagno. (*Rad. Engineering*, February, 1934, Vol. 14, No. 2, pp. 16–18.)

VERLUSTWINKEL- UND WIDERSTANDMESSUNGEN AN ISOLIERSTOFFEN IN ELEKTRISCHEN FELDERN MIT PARALLEL ÜBERLAGERTEN MAGNETISCHEN FELDERN (Loss Angle and Resistance Measurements on Insulating Materials in Electrical Fields with Parallel Superposed Magnetic Fields [No Appreciable Influence of the Latter Fields]).—G. Konried. (*Archiv f. Elektrot.*, 15th March, 1934, Vol. 28, No. 3, pp. 154–161.)

PRÜFUNG VON RUNDFUNKEMPFÄNGERN AM LAUFENDEN BAND (The Conveyor Band Testing of Broadcast Receivers).—P. Geuter and H. Fery. (*E.T.Z.*, 8th March, 1934, Vol. 55, No. 10, pp. 248–250.)

MEASUREMENTS OF ALTERNATING VOLTAGE WITH THE DUANT ELECTROMETER.—G. Michel. (*Zeitschr. f. Physik*, 1934, Vol. 84, No. 11/12, pp. 706–717.)

Alternating voltages of frequencies up to 10^6 per sec. can be measured to 0.1 millivolt, if an arrangement is used to give phase equality between the auxiliary voltage and the voltage to be measured. *See* also below.

THE BEHAVIOUR OF THE DUANT ELECTROMETER AS REGARDS ALTERNATING VOLTAGES [Theory of Use with H.F. Voltages].—A. Herrmann. (*Zeitschr. f. Physik*, 1934, Vol. 84, No. 11/12, pp. 718–725.) *See* also above.

AN IMPROVED X-RAY MEASURING EQUIPMENT [Two-Valve Electrometer, with Stabilivolt Mains Voltage Regulation: suitable for Many Applications].—E. Hasché: Hausser, Jaeger and Vahle. (*Zeitschr. f. tech. Phys.*, No. 2, Vol. 15, 1934, pp. 68–72.) *See* also below.

ÜBER RÖHRENELEKTROMETER MIT NETZANSCHLUSS (Valve Electrometer for Mains Supply: Critical Remarks on the Sensitivity Question).—E. Hasché. (*E.T.Z.*, 15th March, 1934, Vol. 55, No. 11, pp. 267–269.) *See* also above.

D.C. QUOTIENT METERS [including New Parallel-Bobbin Types].—F. Langen. (*Bull. Assoc. suisse des Élec.*, 2nd March, 1934, Vol. 25, No. 5, pp. 123–125.)

MAKING A.C. AND D.C. SCALES CORRESPOND ON A UNIVERSAL VOLTMETER.—C. F. Mathieson. (*Electronics*, February, 1934, p. 55.)

EIN NEUES HOCHEMPFINDLICHES WECHSELSTROMMESSGERÄT FÜR NIEDER- UND MITTELFREQUENZ ZUR MESSUNG VON BETRAG UND PHASE (A New Highly Sensitive A.C. Measuring Instrument for Low and Medium Frequencies, for the Measurement of Amplitude and Phase [with Sensitivity of Same Order as M.C. Mirror Galvanometer for Direct Currents]).—W. Bader. (*Archiv f. Elektrot.*, 15th March, 1934, Vol. 28, No. 3, pp. 139–154.)

ELECTRICAL MEASURING INSTRUMENTS [a Review of Progress: Industrial and Scientific Instruments].—W. Phillips: B. A. Robinson. (*Journ. I.E.E.*, February, 1934, Vol. 74, No. 446, pp. 161–166: 166–171.)

ELECTRICAL MEASUREMENTS IN RELATION TO THE TECHNICAL PROGRESS OF INDUSTRY.—A. P. M. Fleming. (*Journ. I.E.E.*, December, 1933, Vol. 73, No. 444, pp. 591–595.)

ELECTRICAL AND MAGNETIC UNITS [Report on International Commission, Paris, 1933].—J. Wallot. (*E.T.Z.*, 22nd Feb. 1934, Vol. 55, No. 8, pp. 189–190.)

SUBSIDIARY APPARATUS AND MATERIALS

ARRANGEMENT FOR THE AUTOMATIC CALCULATION OF NETWORKS OF IMPEDANCES: APPLICATION TO DIPOLE AND QUADRIPOLE ELECTRIC FILTERS.—L. Abélès. (*L'Onde Élec.*, December, 1933, Vol. 12, No. 144, pp. 580–600.)

Conclusion of the paper dealt with in March Abstracts, p. 164, r-h column. The present instalment includes a partial treatment of dipoles with resistive elements. In his summing up the writer remarks that he has shown how the properties of such networks can be expressed in the form of impedance characteristics. For each of the $F(\omega)$ curves whose tracing has been described, operational calculus gives the corresponding curve $G(t)$ representing the behaviour of the network as a function of time, when the network is in a free régime or is submitted to external actions. The

methods indicated are not limited to electrical systems but can be applied to mechanical systems. They should be specially valuable in connection with electro-acoustic generators and reproducers.

A CONTINUOUSLY ADJUSTABLE BAND PASS FILTER [Same Band Width and Discrimination at Any Setting: Small Distortion: Impedance approximately Constant].—G. H. Lovell. (*Bell Lab. Record*, February, 1934, Vol. 12, No. 6, pp. 173–176.)

A two-section filter with fixed coils and adjustable condensers. The model described has a band width of 3 kc in a range of 400–1 200 kc/s; another has been built with a band width of 500 cycles in a range 22–52 kc/s.

VARIABLE AND FIXED BROADCAST BAND-PASS FILTERS.—Glowatzki: Cauer. (*See* under "Reception.")

A UNIQUE OSCILLOGRAPH [Portable, permitting Simultaneous Viewing and Photographing by Small Rotating Mirror Drum, which also gives Continuous Time Axis].—K. A. Oplinger. (*Elec. Engineering*, February, 1934, Vol. 53, No. 2, pp. 290–293.)

DEVELOPMENTS IN CATHODE-RAY OSCILLOGRAPHY [Survey, based largely on Gábor's Work].—G. Burger. (*Rev. Gén. de l'Élec.*, 10th March, 1934, Vol. 35, No. 10, pp. 307–318.)

PROGRESS IN CONSTRUCTION AND EFFICIENCY OF THE MAGNETIC ELECTRON MICROSCOPE.—E. Ruska. (*Zeitschr. f. Physik*, 1934, Vol. 87, No. 9/10, pp. 580–606.)

This paper describes the construction and use of an apparatus for rendering visible very small particles and details which were hitherto too small to be detected, but which can now be viewed thanks to the very short wavelengths belonging, on de Broglie's theory, to the electrons. Any objects can be dealt with which can be obtained as sufficiently thin films and brought into a vacuum. Some microphotograms are shown in the paper and the possibilities of further increase of efficiency are considered.

FELDKOMBINATIONEN ZUR GESCHWINDIGKEITS UND MASSENSPEKTROGRAPHIE. I. (Field Combinations [in the Electron Microscope] for Velocity and Mass Spectrography. I.).—W. Henneberg. (*Ann. der Physik*, February, 1934, Series 5, Vol. 19, No. 3, pp. 335–344.)

This paper gives a theoretical investigation of the paths of charged particles in a homogeneous magnetic field and the electrical field of a cylindrical condenser, with reference to the focusing properties, dispersion and separation of masses.

ELECTRONIC DIFFRACTION BY CELLULOSE FILMS.—J. J. Trillat. (*Comptes Rendus*, 12th March, 1934, Vol. 198, No. 11, pp. 1025–1027.)

INFLUENCE OF THE SOLVENT ON THE LAW OF VARIATION OF THE FLUORESCENT POWER OF CERTAIN COLOURING MATTERS AS A FUNCTION OF THE CONCENTRATION OF THEIR SOLUTIONS.—J. Bouchard. (*Comptes Rendus*, 12th Feb. 1934, Vol. 198, No. 7, pp. 649–651.)

SENSITIVITY OF PHOTOGRAPHIC PLATES AND FILMS EXPRESSED IN DEGREES DIN [German Unit in place of Scheiner Degree].—(*Zeitschr. V.D.I.*, 3rd March, 1934, Vol. 78, No. 9, pp. 300–301.)

THE EXPANSION CHARACTERISTICS OF SOME COMMON GLASSES AND METALS [in connection with Glass/Metal Seals].—E. E. Burger. (*Gen. Elec. Review*, February, 1934, Vol. 37, No. 2, pp. 93–96.)

A RELIABLE SAFETY VALVE FOR THE SHORTENED MACLEOD MANOMETER.—W. von Meyeren. (*Zeitschr. f. tech. Phys.*, No. 2, Vol. 15, 1934, pp. 51–52.)

THE CONTINUOUS ADMISSION AND MEASUREMENT OF VERY SMALL AMOUNTS OF GAS [Mercury-Glass Pump for Rates of 15–0.1 cm^3/min. or less].—E. A. Müller. (*Ibid.*, pp. 52–54.)

A NEW MICROMANOMETER [accurate to 0.01 mm of Water].—O. Stålhane. (*Journ. Scient. Instr.*, March, 1934, Vol. 11, No. 3, pp. 79–82.)

NEW MEASUREMENTS IN THE REGION OF SMALL CONTROLLABLE CURRENTS [Vorstromgebiet] OF GRID-CONTROLLED DISCHARGE TUBES [Gas- or Vapour-Filled].—W. Koch. (*Zeitschr. f. tech. Phys.*, No. 2, Vol. 15, 1934, pp. 64–68.)

The normal discharge characteristic of such a tube separates two distinct regions, one above it and one below. The former is the region of discharge, the latter is the region in which far smaller completely controllable anode currents flow and the tube behaves like a high-vacuum valve. The writer's measurements on these anode currents in an argon-filled tube showed, for high negative grid potentials, a linear rise of the logarithm of the anode current with the grid voltage; with small negative grid potentials, a more sudden rise. Simultaneous measurements of the corresponding grid currents confirmed the proportionality, already found by Nottingham (Abstracts, 1931, p. 269), between grid and anode currents, so long as the former is purely ionic: this is the case when the anode potential is high and the negative grid potential correspondingly high, but the proportionality is lost when low anode potentials are used. The ratios of grid current to anode current show that for high anode voltages the fraction of the ions going to the cathode can at the most be of the order of 1%. Klemperer's assumption that all the ions go to the cathode (1933, p. 459, l-h col.) is therefore invalid.

HIGH-TENSION HOT-CATHODE RECTIFIERS OF SMALL POWER FOR BROADCASTING TRANSMITTERS [6 Tubes providing about 7 kw Anode Supply: with Bell-Shaped Anode surrounding Top of Cathode to prevent Back Discharge provoked by H.F. Radiation and to avoid Wall-Charge Effects].—H. J. Zetzmann: Kluge. (*E.T.Z.*, 1st March, 1934, Vol. 55, No. 9, pp. 215–217.) For the new bell-shaped anode *see* Kluge, *AEG-Mitteilungen*, No. 3, 1934.

ASYMMETRICAL GAS DISCHARGES AT HIGH FREQUENCIES [Investigation of Rectifying Effect, between Internal Electrodes in Cylindrical Discharge Tube, produced by an External Electrode].—R. Rotzeig: Rohde. (*Hochf. tech. u. Elektakus.*, February, 1934, Vol. 43, No. 2, p. 65: summary only.)

A Jena Dissertation on the exhaustive examination of an effect discovered by Rohde. It is concluded that the rectification is a function of the non-uniformly distributed electron density: the electrode lying in the stronger part of the discharge behaves as the negative pole of a source of potential. The rectification increases with an increase of the discharge and markedly with increasing frequency. If a d.c. potential is superposed on the h.f. potential a distinct effect is shown. The static field brings about a migration of the heavier ions also. The writer derives, from the saturation current, information as to the ionisation due to the h.f. field, and a qualitative idea of the number of electrons present can thus be obtained.

ON THE EFFECT OF WATER ON CERTAIN RECTIFYING CONTACTS [*e.g.*, Oxidised-Silicon/Carbon with Interposed Metallic Salt: Increasing Internal Resistance after Working due to Evaporation of Water].—R. Audubert and J. Roulleau. (*Comptes Rendus*, 22nd Jan. 1934, Vol. 198, No. 4, pp. 344–346.)

RÔLE OF THE BARRIER LAYER IN IMPERFECT-CONTACT RECTIFICATION [No Need for Thickness to be of Order of 10^{-5} cm or Under].—M. Quintin. (*Ibid.*, pp. 347–349.)

NEW DEVELOPMENTS IN THE CONSTRUCTION AND APPLICATION OF COPPER-OXIDE RECTIFIERS.—K. Baudisch. (*E.T.Z.*, 1st March, 1934, Vol. 55, No. 9, pp. 208–211.)

NEW DEVELOPMENTS IN CONNECTION WITH THE SELENIUM RECTIFIER [particularly Its Use for providing 30–40 Amperes direct from A.C. Mains].—K. Maier. (*E.T.Z.*, 1st March, 1934, Vol. 55, No. 9, pp. 221–222.)

VARIATIONS WITH TIME OF THE CURRENT INTENSITY IN A SEMI-CONDUCTING SUBSTANCE SUBMITTED TO A WEAK POTENTIAL.—G. Déchêne. (*Comptes Rendus*, 12th March, 1934, Vol. 198, No. 11, pp. 1021–1023.)

Continuation of the work referred to in 1933 Abstracts, p. 515, r-h column.

STABILISED FEEDBACK AMPLIFIERS.—H. S. Black. (*Bell S. Tech. Journ.*, January, 1934, Vol. 13, No. 1, pp. 1–18.) *See* March Abstracts, pp. 155–156.

DIRECT CURRENT AMPLIFIER FOR RADIOMETERS.—Bureau of Standards. (*Journ. Franklin Inst.*, February, 1934, Vol. 217, No. 2, pp. 231–232.)

INDIRECTLY HEATED VALVES IN THE AMPLIFICATION OF CONTINUOUS CURRENTS [Causes of Instability in Previous Bridge-Connected Amplifiers: the Advantages of Indirectly Heated Valves: etc.]—P. Donzelot, E. Pierret and J. Divoux. (*Comptes Rendus*, 5th March, 1934, Vol. 198, No. 10, pp. 912–913.) For the previous paper *see* 1933 Abstracts, p. 460, l-h column.

THE DISTRIBUTION OF TEMPERATURE AND THE HIGHEST TEMPERATURE INSIDE A CURRENT-CARRYING COIL OF RECTANGULAR CROSS SECTION AND LINEAR RESISTANCE/TEMPERATURE VARIATION. — H. Buchholz. (*Archiv f. Elektrot.*, 15th Feb. 1934, Vol. 28, No. 2, pp. 122–130.)

THE DESIGN CALCULATION OF HIGH-FREQUENCY COILS ACCORDING TO THEIR LOSSES.—Gönningen: Lorenz Company. (*See* under "Measurements and Standards.")

A NEW FORM OF HIGH-FREQUENCY RESISTANCES.—P. Wenk and M. Wien. (*Physik. Zeitschr.*, 15th Feb. 1934, Vol. 35, No. 4, pp. 145–147.)

The resistances described are made by sublimating metallic vapours on to small cylinders of a special porcelain. They have very small capacities and self-inductances and will carry reasonably high currents for long periods without appreciable changes in resistance.

RESISTANCE LAMPS [New Series of Small Tungsten Lamps with Tubular Bulbs].—N. Insley. (*Bell Lab. Record*, February, 1934, Vol. 12, No. 6, pp. 170–172.)

"URDOX" URANIUM-OXIDE AND IRON-"URDOX" BARRETTER RESISTANCES.—Osram Company. (*E.T.Z.*, 1st March, 1934, Vol. 55, No. 9, pp. 229–230.)

A CAPACITY POTENTIAL DIVIDER [for Frequencies up to 10^6 c/s and Pressures of 60 000 Volts].—J. E. Richardson. (*Journ. Scient. Instr.*, March, 1934, Vol. 11, No. 3, pp. 82–85.)

THE SKIN EFFECT IN FERROMAGNETIC CIRCULAR CYLINDERS FOR WEAK ALTERNATING FIELDS.—Hinze. (*See* under "Propagation of Waves.")

THE MEASUREMENT OF THE INDUCTANCE OF IRON-CORED CHOKES CARRYING DIRECT CURRENT.—E. O. Willoughby. (*Proc. Phys. Soc.*, 1st March, 1934, Vol. 46, Pt. 2, No. 253, pp. 292–299.)

TWO APPLICATIONS OF NON-LINEAR CIRCUITS [Automatic Voltage Regulator, with Thyratron Control of Control Circuit of Reactor: Improvement of Synchronous Machine Stability].—T. M. Austin and F. W. Cooper. (*Elec. Engineering*, February, 1934, Vol. 53, No. 2, pp. 293–300.) *See* also 1933 Abstracts, p. 403 (Suits) and 227 (GEC).

A DEVICE FOR MAINTAINING A STEADY DIRECT CURRENT [from Mains or Common Battery: by Compensating Current from Small-Capacity Accumulator Bank].—H. H. Potter. (*Journ. Scient. Instr.*, March, 1934, Vol. 11, No. 3, pp. 95–96.)

STABILOVOLT CIRCUIT GIVING ANODE SUPPLY AND NEGATIVE GRID BIAS.—Stabilovolt Company. (German Pat. 574 924: *Funktech. Monatshefte*, February, 1934, No. 2, pp. 83–84.)

"SAJA" SINGLE-PHASE SYNCHRONOUS MOTORS FOR GRAMOPHONES.—K. Kaufmann. (*E.T.Z.*, 1st March, 1934, Vol. 55, No. 9, pp. 213–214.)

NEW INSULATING MATERIALS AT THE LEIPZIG FAIR [with Titanium-Oxide Base: "Condensa" and "Kerafar"].—E. Schwandt. (*See* reference under "Miscellaneous.")

Dielectric constants can be obtained ranging from 40 to more than 100, but the dielectric losses (tan $\delta = 8$–18×10^4) increase with them. Tubes with a wall-thickness under 0.17 mm can be produced.

KERAFAR, A NEW CERAMIC INSULATING MATERIAL [specially suitable for Fixed and Adjustable Condensers: S.I.C. between 70 and 100].—(*E.T.Z.*, 1st March, 1934, Vol. 55, No. 9, p. 238.)

FURTHER IMPROVEMENTS IN CERAMIC INSULATING MATERIALS (Calit, Calan, Ultra-Calan).—(*Ibid.*, pp. 238–239.)

NEW HIGH-FREQUENCY INSULATING MATERIALS [I.—Low-Loss, particularly "Ultra-Calan." II.—With High Dielectric Constants (20–100) particularly "Condensa" and "Condensa C"].—H. Handrek. (*Hochfztech. u. Elekzakus.*, March, 1934, Vol. 43, No. 3, pp. 73–75.)

A NEW PORCELAIN FOR INSULATORS ("Italian Porcelain.")—M. Korach. (*L'Elettrotec.*, 15th Feb. 1934, Vol. 21, No. 5, pp. 89–97.)

MEASUREMENT OF WETTING OF DIELECTRICS [relative to Characteristics of Impregnated Fibrous Structures].—D. A. McLean and G. T. Kohman. (*Elec. Engineering*, February, 1934, Vol. 53, No. 2, pp. 255–258.)

MERCURY ELECTRODES FOR MEASUREMENTS ON SOLID DIELECTRICS AT RADIO FREQUENCIES.—T. Iorweth Jones. (*Journ. I.E.E.*, February, 1934, Vol. 74, No. 446, pp. 179–186.)

TESTING THE DIELECTRIC STRENGTH OF INSULATING VARNISHES.—A. R. Matthis. (*Rev. Gén. de l'Élec.*, 3rd March, 1934, Vol. 35, No. 9, pp. 287–293.)

IS THERE AN INTERMEDIATE ZONE BETWEEN THE THERMAL BREAKDOWN AND THE PURELY ELECTRICAL BREAKDOWN?—W. O. Schumann. (*Archiv f. Elektrot.*, 15th February, 1934, Vol. 28, No. 2, p. 138.)

OSCILLATIONS DUE TO IONISATION IN DIELECTRICS, AND METHODS OF THEIR DETECTION AND MEASUREMENT: *and* INVESTIGATION OF CABLE IONISATION CHARACTERISTICS WITH DISCHARGE DETECTION BRIDGE.—J. Tykocinski Tykociner, H. A. Brown and E. B. Paine. (*Univ. Illinois Bull.*, No. 49, Vol. 30, 1933, 60 pp.: No. 50, Vol. 30, 1933, 46 pp.)

A NEW PHENOMENON ON THE RESIDUAL CHARGE [of Crystalline and Amorphous Dielectrics].—S. Shimizu. (*Journ. I.E.E. Japan*, November, 1933, Vol. 53 [No. 11], No. 544, pp. 987–999: English summary pp. 93–94.)

MEASUREMENT OF THE THERMAL CONDUCTIVITY AND SPECIFIC HEAT OF INSULATING MATERIALS.—P. Vernotte. (*Comptes Rendus*, 3rd Jan. 1934, Vol. 198, No. 1, pp. 57–59.)

BREAKDOWN UNDER IMPULSE VOLTAGES IN TWO-LAYER MEDIA (Gas-Liquid).—A. Nikuradse. (*Archiv f. Elektrot.*, 15th Feb. 1934, Vol. 28, No. 2, pp. 95–105.)

THE INHERENT POWER FACTOR OF AIR CONDENSERS AND LIMITS OF POWER-FACTOR BRIDGE MEASUREMENTS.—J. C. Balsbaugh. (*Phys. Review*, 15th Feb. 1934, Series 2, Vol. 45, No. 4, p. 286: abstract only.)

THERMO-MECHANICS OF BIMETAL.—T. A. Rich. (*Gen. Elec. Review*, February, 1934, Vol. 37, No. 2, pp. 102–105.)

HIGH-SPEED PHOTOGRAPHIC RECORDING BY FILM ON PERIPHERY OF ROTATING DISC [30 000 Records per Second].—A. and C. Magnan. (*Comptes Rendus*, 12th Feb. 1934, Vol. 198, No. 7, pp. 635–637.)

DETECTION OF SIMULTANEOUS PHENOMENA BY TRIODE VALVE COMBINATIONS [with Rejection of Cases of Apparent Simultaneity due to Chance].—Leprince-Ringuet. (*See* under "Atmospherics and Atmospheric Electricity.")

ON SOME NEW INTEGRAPHS AND DIFFERENTIATORS [Instruments for Mechanical Integration, Differentiation, and Harmonic Analysis].—P. Boisseau. (*Comptes Rendus*, 29th Jan. 1934, Vol. 198, No. 5, pp. 433–434.) For previous papers *see* 1933 Abstracts, p. 517, r-h column.

A NEW APPROXIMATE METHOD OF HARMONIC ANALYSIS.—Terebesi. (*See* under "Acoustics and Audio-frequencies.")

STATIONS, DESIGN AND OPERATION

THE ANGLO-FRENCH MICRO-RAY LINK BETWEEN LYMPNE AND ST. INGLEVERT.—A. G. Clavier and L. C. Gallant. (*Elec. Communication*, January, 1934, Vol. 12, No. 3, pp. 222–228: *Rad. Engineering*, February, 1934, Vol. 14, No. 2, pp. 19–22.) *See* also April Abstracts, p. 222.

THE ULTRA-SHORT-WAVE COMMUNICATION BETWEEN LYMPNE AND ST.-INGLEVERT: THE MICRO-RADION VALVE. (*Génie Civil*, 17th Feb. 1934, Vol. 104, No. 7, pp. 157–158.)

HAS BROADCAST TRANSMISSION REACHED FINALITY?—P. W. Willans. (*Wireless World*, 9th March, 1934, Vol. 34, pp. 158–160.)

The author discusses the interference problems brought about by the increase in the number and power of European broadcasting stations, and suggests various lines of research which may ultimately lead to their solution. In particular he draws attention to the problems of the "single side-band" system and to the use of a large number of transmitters working on ultra-short wavelengths.

THE APPLICATION OF THE NEW WAVELENGTH ALLOCATION ACCORDING TO THE LUCERNE PLAN.—M. Adam. (*Génie Civil*, 3rd March, 1934, Vol. 104, No. 9, pp. 199–201.)

THE DEVELOPMENT AND ORGANISATION OF FRENCH BROADCASTING.—M. Adam. (*Rev. Gén. de l'Élec.*, 10th March, 1934, Vol. 35, No. 10, pp. 323–329.)

THE DEVELOPMENT OF BROADCASTING IN ITALY.—G. Rautenkrantz. (*E.T.Z.*, 22nd Feb. 1934, Vol. 55, No. 8, pp. 195–196.) *Cf.* Chiodelli, February Abstracts, p. 109, r-h column.

LAND-LINES FOR BROADCASTING IN GERMANY [including Measuring and Supervising Technique].—R. W. P. Leonhardt. (*World-Radio*, 9th March, 1934, Vol. 18, No. 450, pp. 350–351.) *See* also Sprinck, March Abstracts, p. 166, l-h column.

THE RADIATION FIELD OF THE LEIPZIG HIGH-POWER BROADCASTING STATION.—H. Simon. (*Funktech. Monatshefte*, February, 1934, No. 2, pp. 59–62.)

WBBM AND KFAB TO BE SYNCHRONISED [New Move in Common-Wave Broadcasting, with 4 kc/s Reference Frequency].—(*Electronics*, February, 1934, p. 54: with diagram.)

WORLD TELEPHONY.—F. Lubberger. (*E.T.Z.*, 1st March, 1934, Vol. 55, No. 9, pp. 217–219.)

GENERAL PHYSICAL ARTICLES

ON THE PARTICLES WHICH CAN BE ASSOCIATED WITH THE PROPAGATION OF A LIGHT WAVE.—Al Proca. (*Comptes Rendus*, 12th Feb. 1934, Vol. 198, No. 7, pp. 643–645.)

COSMICAL ELECTRIC FIELDS.—W. F. G. Swann. (*Phys. Review*, 15th Feb. 1934, Series 2, Vol. 45, No. 4, p. 295: abstract only.)

HIGH FREQUENCY LOSSES AND MOLECULAR STRUCTURE.—P. Debye. (*Physik. Zeitschr.*, 1st Feb. 1934, Vol. 35, No. 3, pp. 101–106.)

THEORETICAL INVESTIGATIONS ON THE MASS-SPECTROMETER WITHOUT A MAGNETIC FIELD [Effect of High-Frequency Electric Fields on Paths of Electrified Particles].—R. Herzog and J. Mattauch. (*Ann. der Physik*, February, 1934, Series 5, Vol. 19, No. 4, pp. 345–386.)

ON THE RELATIVISTIC QUANTIC INTERACTION [and the Derivation, from Classical Formulae, of Equations for the Mutual Magneto-Electric Energy of Two Electrons].—K. Nikolsky. (*Comptes Rendus*, 12th March, 1934, Vol. 198, No. 11, pp. 1013–1015.)

A NEW METHOD OF INTEGRATING THE ELECTROMAGNETIC WAVE EQUATION, AND ITS APPLICATION TO THE PHYSICS OF THE ELECTRON.—R. Reulos. (*Ibid.*, pp. 1015–1018.)

THE MEASUREMENT OF THE SPECIFIC CHARGE OF AN ELECTRON [Zeeman Effect Method "comes out wrong": Hydrogen Spectrum Results differ from Dirac Equation Predictions].—V. W. Houston. (*Science*, 19th Jan. 1934, Vol. 79, No. 2038, Supp. p. 6.)

ORIGIN OF THE POSITRON [New Calculations from Dirac Equation].—W. Heitler and F. Sauter. (*Ibid.*, p. 6.)

ARTIFICIAL RADIOACTIVITY PRODUCED FOR FIRST TIME.—Joliot and Irene Curie-Joliot. (*Sci. News Letter*, 10th Feb. 1934, Vol. 25, No. 670, p. 83.)

THE ROYAL SOCIETY AND HEAVY HYDROGEN [Diplogen ?].—(*Science*, 12th Jan. 1934, Vol. 79, No. 2037, p. 26.)

ELECTRIC DISCHARGES IN GASES: IONISATION AND EXCITATION [Survey of Current Knowledge].—L. Tonks. (*Elec. Engineering*, February, 1934, Vol. 53, No. 2, pp. 239–243: to be continued.)

THE MOTION OF ELECTRONS NEAR A PLANE PHOTO-ELECTRODE IN THE PRESENCE OF A GAS.—A. M. Cravath. (*Phys. Review*, 15th Jan. 1934, Series 2, Vol. 45, No. 2, p. 138: abstract only.)

THE IONISATION OF CAESIUM VAPOUR BY ULTRA-VIOLET LIGHT.—J. Kunz. (*Phil. Mag.*, February, 1934, Supp. No., Series 7, Vol. 17, No. 112, pp. 483–491.)

This paper describes a determination of the coulombs liberated per erg of the incident beam and the atomic ionisation coefficient for wavelengths between 3 130 and 2 400 A.U. and for three temperatures of 25°, 75° and 125° C.

MISCELLANEOUS

I.E.E. WIRELESS SECTION: CHAIRMAN'S ADDRESS.—G. Shearing. (*Journ. I.E.E.*, January, 1934, Vol. 74, No. 445, pp. 11–31.)

Part I: Naval wireless communications, including the Coales automatic direction-finding system, in which the frame-coil or goniometer search-coil is rotated by an electric motor and is governed in its hunt for the minimum by a device making use of the fact that a transformer differentiates (by the polarity of its induced e.m.f.) between an increasing and a decreasing current. Part II: Some recent developments, including the neon tube inter-valve coupling for amplifiers developed by Smith and Hill (*see* Balzerowski, under "Reception," and back references): "this form of amplifier is particularly advantageous for low frequencies or for the amplification of a permanent voltage-increment such as in the case of photoelectric cells." Part III: The International Radio Conference and the European Broadcasting Convention.

RADIO RESEARCH IN 1933.—R. A. Watson Watt. (*Electrician*, 16th Feb. 1934, Vol. 112, No. 2907, p. 216.)

TABLES OF FUNCTIONS [with Curves and Diagrams showing Functions in Relief: in German and English].—Jahnke and Emde. (Book Review in *Wireless Engineer*, March, 1934, Vol. 11, No. 126, p. 121.)

SHORT-WAVE WIRELESS COMMUNICATION [Book Review].—Ladner and Stoner. (*Wireless Engineer*, April, 1934, Vol. 11, No. 127, p. 192.) Notice of 2nd (enlarged) edition of the book referred to in 1933 Abstracts, p. 580, r-h column.

A MATHEMATICAL THEORY OF RATIONAL INFERENCE [Bayes' Theorem].—T. C. Fry: Bayes. (*Bell Lab. Record*, February, 1934, Vol. 12, No. 6, pp. 185–189.)

ON THE DRAWING OF CIRCUIT DIAGRAMS.—F. W. Gundlach. (*Funktech. Monatshefte*, February, 1934, No. 2, pp. 51–53.)

PATENT SPECIFICATIONS [and the Desirability of Less Vague Titles].—W. H. Merriman. (*Wireless Engineer*, April, 1934, Vol. 11, No. 127, pp. 195–196.)

BROADCASTING TECHNIQUE AT THE LEIPZIG FAIR.—E. Schwandt. (*Funktech. Monatshefte*, March, 1934, No. 3, pp. 85–87.) *See* under "Reception" "Valves and Thermionics," "Acoustics," and "Subsidiary Apparatus and Materials."

PHYSICAL SOCIETY'S 24TH ANNUAL EXHIBITION: DESCRIPTION OF THE EXHIBITS.—(*Journ. Scient. Instr.*, February, 1934, Vol. 11, No. 2, pp. 49–68.)

A SPARKLESS ELECTRIC BELL [without Make-and-Break] GIVING NO RADIO INTERFERENCE.—Etablissements Deri. (French Pat. 754 314, pub. 6.11.1933: *Rev. Gén. de l'Élec.*, 27th Jan., 1934, Vol. 35, No. 4, p. 30 D.)

ELECTRICAL METHODS OF GEOPHYSICAL PROSPECTING.—J. McG. Bruckshaw. (*Journ. I.E.E.*, November, 1933, Vol. 73, No. 443, pp. 521–541: Discussion, *ibid.*, March, 1934, Vol. 74, No. 447, pp. 273–274.)

RECENT INVESTIGATIONS ON TELEPHONE INTERFERENCE [from Power Systems].—W. G. Radley and S. Whitehead. (*Journ. I.E.E.*, March, 1934, Vol. 74, No. 447, pp. 201–239.)

A NEW THERMAL PRINCIPLE OF MEASUREMENT [Ultra-Micrometer Method depending on Varying Gap between Bolometer Strip and Cold Heat-Conducting Edge].—Reiss. (*See* under "Measurements and Standards.")

AMPLIFIER UNITS [Microphones, Pick-Ups, Amplifiers and Loudspeakers] FIND NEW USES IN INDUSTRY.—(*See* under "Acoustics and Audio-frequencies.")

A PSEUDO-BROADCASTING PUBLIC ADDRESS SYSTEM [at Stockholm World Power Conference: Each Delegate provided with Loop Aerial over Shoulder, Detector, and Headphones].—M. Vos and S. Rohde. (*L.M. Ericsson Review*, No. 3, 1933, p. 164.)

THE CONDUCTIVITY OF [Very Thin] METALLIC FILMS IN AN ELECTRIC FIELD.—E. Perucca. (*Comptes Rendus*, 29th Jan. 1934, Vol. 198, No. 5, pp. 456–458.) Contradicting the results of Pierucci (1932 Abstracts, p. 541).

A LATENT IMAGE MECHANISM [applicable to Astronomy, Biology, etc.: New Development of Iconoscope].—V. K. Zworykin. (*Science*, 2nd March, 1934, Vol. 79, No. 2044, Supp. p. 10.)

A PHOTOELECTRIC SPECTROPHOTOMETER USING DUAL ELECTROSTATIC COMPENSATION.—L. A. Woodward. (*Proc. Roy. Soc.*, 1st March, 1934, Vol. 144, No. A 851, pp. 118–128.)

A SIMPLE MICROPHOTOMETER [with Barrier-Layer Photocell].—H. von Oehmcke. (*Zeitschr. f. tech. Phys.*, No. 2, Vol. 15, 1934, pp. 72–74.)

AN AUTOMATIC PHOTOELECTRIC PHOTOMETER.—E. B. Moss. (*Proc. Phys. Soc.*, 1st March, 1934, Vol. 46, Part 2, No. 253, pp. 205–213.)

THE MEASUREMENT OF VERY WEAK LUMINOUS FLUXES BY THE PHOTOCELL [using an Electrometer Triode as Resistance Coupling to Amplifying Electrometer Triode: Sensitivities up to 10^{-12} lumen/mm of Galvanometer Deflection].—E. Gambetta. (*Comptes Rendus*, 22nd Jan. 1934, Vol. 198, No. 4, pp. 342–344.) Continuation of work referred to in 1933 Abstracts, p. 462, r-h column.

A PORTABLE ULTRA-VIOLET INTENSITY METER, CONSISTING OF A BALANCED AMPLIFIER, PHOTOELECTRIC CELL, AND MICROAMMETER.—W. W. Coblentz and R. Stair. (*Bur. of Stds. Journ. of Res.*, February, 1934, Vol. 12, No. 2, pp. 231–237.)

ESCALATOR STARTED BY PHOTOCELL [Economical Innovation in a Berlin Railway Station].—(*Electronics*, February, 1934, p. 57.)

THE DEVELOPMENT OF ULTRA-SHORT-WAVE THERAPY [and the Special Uses of the Various Waves between 1 and 15 Metres].—W. Holzer. (*E.T.Z.*, 15th March, 1934, Vol. 55, No. 11, pp. 282–283.)

THE TREATMENT OF DISEASE BY SHORT [and Ultra-Short] RADIO WAVES [Distinctive Effects, on Various Diseases, of Waves between 4 and 15 Metres: Physical Society's Exhibition].—Schliephake: Liebesny. (*Science*, 19th Jan. 1934, Vol. 79, No. 2038, Supp. p. 7.) *Cf.* April Abstracts, p. 224.

MICRO-WAVES OF LESS THAN HALF AN INCH: ABSORPTION TESTS IN AMMONIA GAS, GIVING DIAMETER OF MOLECULES.—C. E. Cleeton and N. H. Williams. (*Science*, 23rd Feb. 1934, Vol. 79, No. 2043, Supp. p. 5.)

A "tiny vacuum tube" was used, with graphite cylindrical anodes three-tenths of an inch in diameter. Strong magnetic fields were employed. *See* also under "Transmission."

ALTERNATING CURRENT CONDUCTANCE AND DIRECT CURRENT EXCITATION OF NERVE.—K. S. Cole. (*Science*, 16th Feb. 1934, Vol. 79, No. 2042, pp. 164–165.)

AMPLIFIERS USED TO STUDY CURRENTS PRODUCED BY THOUGHTS.—L. W. Max. (*Electronics*, February, 1934, p. 48.)

PHYSICAL PROOF IS LACKING OF EXISTENCE OF MITOGENETIC RAYS [Negative Results with Geiger Counters].—J. W. Schereschewsky. (*Science*, 19th Jan. 1934, Vol. 79, No. 2038, Supp. p. 8.)

Some Recent Patents

The following abstracts are prepared, with the permission of the Controller of H.M. Stationery Office, from Specifications obtainable at the Patent Office, 25, Southampton Buildings, London, W.C.2, price 1/- each.

THERMIONIC VALVES

Convention date (Holland), 2nd April, 1931.
No. 399477

The electrodes of a thermionic valve are "so spaced and are of such dimensions" that when a predetermined heating-current is supplied to the cathode the ratio of the "slope" of the characteristic curve to the heating current is a maximum. The object is to improve the efficiency of the valve in operation. Specific dimensions are given in the specification of a typical valve designed for an A.C. supply of 4 volts to the filament.

Patent issued to N. V. Philips Gloeilampen-Fabrieken.

SWITCH TUNING

Application date, 4th April, 1932. *No.* 399500

Relates to switch-tuned receivers of the type in which a step-by-step control member brings into circuit one or other of a number of pre-set condensers so as to tune the input to a definite station. According to the invention the control member has two independent movements, one of which serves to bring the selected station into tune, whilst the other is used to control the volume of sound at that particular setting.

Patent issued to British Radio Corporation, Ltd., and R. S. Bunting.

AERIALS FOR AIRCRAFT

Application date, 7th April, 1932. *No.* 399543

The object of the invention is to prevent the circulation of currents in the fuselage, or in other parts of the craft forming the "earth" of the transmitting aerial, thereby eliminating the risk of fire or of sparking near the petrol tank. The aerial is formed in two halves, stretched between each wing-tip and the tail of the machine. It is energised at the centre point so that the current in one half is in phase-opposition with that in the other half, and the feed is taken through a non-radiating transmission line, preferably of a length equal to a multiple number of quarter wavelengths. This limits the flow of radiating current to the aerial wires, and the fuselage does not form any part of the aerial circuit.

Patent issued to Standard Telephones & Cables, Ltd., A. D'A. Hodgson, and H. Lardner.

TELEVISION TRANSMITTERS

Application date, 12th October, 1932. *No.* 399654

In a television transmitter of the kind in which the picture is first projected on to a "mosaic" surface of small photo-electric cells, and is then scanned by a cathode ray, it is necessary to mount the sensitised anode at an angle to the scanning ray in order to present its surface squarely to the optical projecting lens, which is mounted outside the cathode-ray tube. This, in turn, causes the anode surface to be foreshortened with respect to the scanning ray. In order to avoid distortion from this cause the picture is projected on to the anode through an optical system which transforms its original rectangular outline into a truncated cone having the shortest side nearest the cathode of the scanning tube.

Patent issued to Electric and Musical Industries, and W. D. Wright.

TELEVISION SCANNING

Application date, 7th April, 1932. *No.* 399552

Scanning is effected by means of a series of mirrors mounted on an endless band which passes over two pulleys, one being of small diameter. The consequent "tilt" or change of angle of each mirror as it passes over the small pulley enlarges the effective scanning-area, as compared with, say, a scanner of the Weiller drum type fitted with the same number of mirrors.

Patent issued to J. L. Baird, and Baird Television, Ltd.

BAND-PASS FILTERS

Application date, 17th March, 1932. *No.* 400215

Changes in attenuation as the band-pass input circuit is tuned up and down the frequency scale

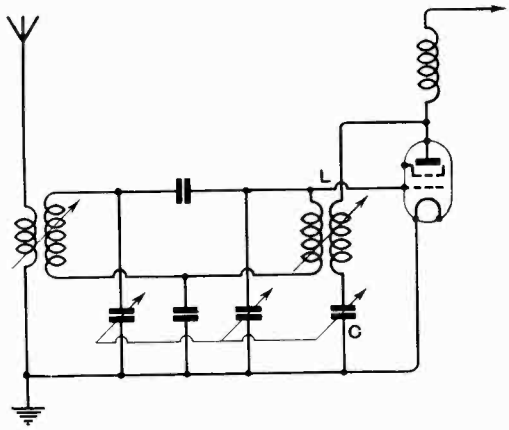

No. 400215.

are compensated by means of a reaction coupling *L*. The amount of negative resistance injected is controlled by a condenser *C*, which is ganged to the other filter condensers and has vanes specially shaped to give the calculated response. In addition, it is provided with a trimmer to allow such additional adjustment as may be necessary when replacing a worn-out valve.

Patent issued to Marconi's Wireless Telegraph Co., Ltd., and A. T. Witts.

A MULTIPLE-FREQUENCY RADIATOR

Convention date (France), 2nd May, 1931. No. 400257

An aerial is built up of a number of tubes or rods *A*, which are bent into circular shape and arranged concentrically with the object of radiating a

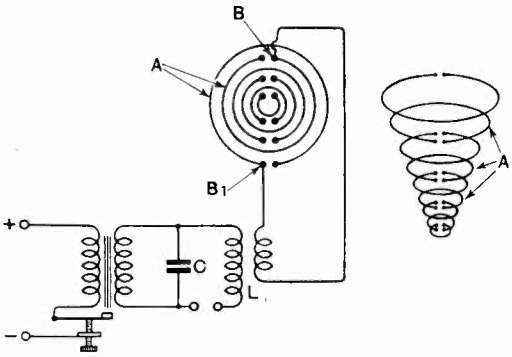

No. 400257.

complex field of different wavelengths. Amongst these there will always be one wavelength suitable for the purpose in view, *i.e.*, the remote control of one or more relays. The energising circuit *L*, *C* is connected at *B* and *B1* to certain of the aerial rings, the remainder being excited by induction.

Patent issued to G. Lakhovsky.

WIRELESS FOR AIRCRAFT

Application date, 23rd April, 1932. No. 400276

An aeroplane aerial is constructed and arranged so as to give substantially no upward radiation, when the craft is flying on an even keel. This eliminates errors due to reflection from the Heaviside layer when the pilot is asking for his bearings from D.F. ground stations. Two dipole aerials, each backed by a reflector dipole, are arranged at right-angles to each other, and inclined at 45° to the vertical, with or without a third pair of horizontal dipoles arranged symmetrically between them. Alternatively a single dipole may be carried on a gimbal mounting which is damped to prevent too violent movement. The aerial may be energised through a pendulum switch which is only operative when the craft is on an even keel.

Patent issued to Marconi's Wireless Telegraph Co., Ltd., and A. A. Linsell.

SUPERHETERODYNE RECEIVERS

Application date, 23rd May, 1932. No. 400321

To minimise local radiation, and to maintain the heterodyne oscillations at a constant amplitude throughout the tuning range, the local-oscillator valve is coupled to the low-potential end of the anode-cathode circuit of the first detector valve through an aperiodic circuit comprising a resistance shunted by a condenser.

Patent issued to E. K. Cole, Ltd., H. Hunt, and E. J. Wyborn.

CATHODE-RAY TUBES

Convention date (Germany), 30th June, 1931. No. 400351

To ensure a sharply defined ray of high intensity, the cathode of the tube is given a bulbous shape and is fitted at the top with a nickel cap having a small control aperture of about 0.1 mm. in diameter, which governs the width of the ray. A highly emissive deposit of barium or strontium oxide is placed in a small hollow formed in the top surface of the cathode, just above the heating-wires and just below the aperture in the metal cap.

Patent issued to Radioaktiengesellschaft D. S. Loewe.

Convention date (Germany), 24th December, 1931. No. 400453

To produce a sharply concentrated ray there is located near the cathode, and in addition to the usual focusing and control electrodes, a conductive diaphragm with a control aperture. This is kept at a temperature lower than that of the cathode and does not itself emit electrons, but acts as a "throttle" for the main stream.

Patent issued to Telefunken Ges. fur drahtlose Telegraphie m.b.h.

SUPER-REGENERATIVE CIRCUITS

Application date, 22nd April, 1932. No. 400268

The "dynation" action of a screen-grid valve is utilised to generate the "quenching" frequency for a super-regenerative receiver. A higher voltage is applied to the screening grid than to the anode of the valve V, and quenching oscillations are produced in the anode circuit *C*, *L*, which includes a variable resistance *R* to control damping. A second circuit *C1*, *L1* is tuned to the signal frequency. In operation the sum of the anode and screen-grid currents remains approximately constant, so that it is possible to hear the rectified

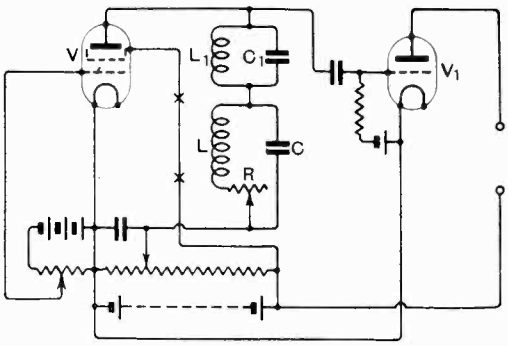

No. 400268.

signals in a telephone inserted directly in the screen-grid lead between the points marked with a cross; or the signals may be fed directly to a grid-leak rectifier *V1*, as shown.

Patent issued to Marconi's Wireless Telegraph Co., Ltd., N. M. Rust, and R. F. O'Neill.

SIGNALLING SYSTEMS

Application date, 23rd April, 1932. No. 400273

Two out-of-phase carrier waves of the same frequency are modulated in such a way that the signal can be detected in a receiver specially designed for the purpose, although since the side-band components are substantially in phase-opposition with each other they will produce no interference or other effect in a receiver of the ordinary type. The two carrier waves are fed from a common source *S* through push-pull amplifiers *V*, *V*1 to separate aerials *A*, *B*, the currents being set in quadrature by phase-adjusting elements *R*, *C*. Push-pull modulator valves *V*2, *V*3 ensure that the signals are applied in phase-opposition. For reception, Fig. (*b*), a detector valve *D* is coupled to a second valve *D*1 through phase-control impedances *C*1, *R*1, so that out-of-phase oscillations are fed back through a coil *L*2 to the input circuit *L*. This ensures demodulation of the original signals, which are reproduced by the loud speaker.

Patent issued to G. W. Walton.

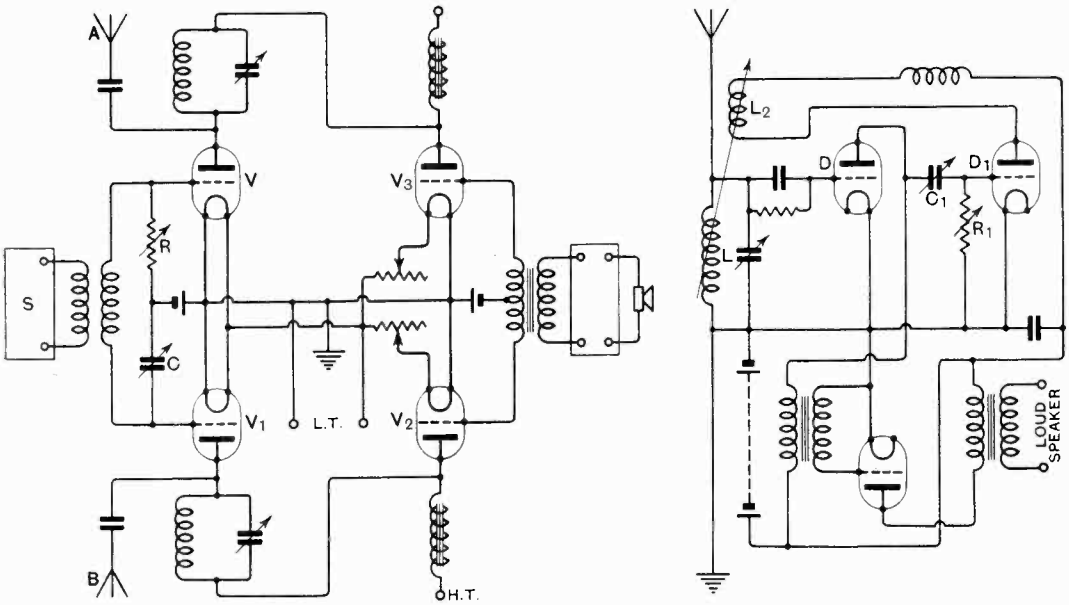

No. 400273.

TELEVISION D.F. BEACONS

Application date, 23rd April, 1932. No. 400279

A rotating beam of radiation carries a televised picture of a compass card which gives at the receiver an instantaneous indication of the bearings of the transmitting station, together with an identification symbol. The transmitting aerial is preferably a rotating loop mounted on the same spindle as the compass card which is televised. Synchronising signals for the receiver are transmitted simultaneously from a separate omni-directional aerial, preferably on a different wavelength.

Patent issued to J. P. Bowen, and Marconi's Wireless Telegraph Co., Ltd.

BATTERY TERMINALS

Application date, 25th April, 1932. No. 400600

To facilitate the tapping-off of a required voltage from a dry-cell battery used for supplying high tension or grid bias, the top of the battery casing is fitted with a cardboard cover having a central slot which extends over the terminals of each cell. In the case of a grid-bias battery the negative terminals from each cell are brought out in the form of strips, which are shaped or curved to lie just below the slot in the cover. The selecting contact consists of a flanged "wander-plug" which can ride easily in the slot, but is spring-pressed into contact with the required cell terminal.

Patent issued to A. R. Pappadakis, and N. J. Sivess.

CATHODE-RAY TUBES

Convention date (Germany), 23rd May, 1931. No. 401727

In order to prevent undue "spreading" of the electron stream in its passage from cathode to anode, ionising means are provided inside the tube, and the free ions so produced serve to focus the stream into a narrow pencil without reducing its effective impact on the fluorescent screen. The extra ionisation is produced either by setting-up a glow discharge across auxiliary electrodes or by inserting a small amount of radio-active substance in pockets formed in the wall of the tube.

Patent issued to M. von Ardenne, and S. Loewe.

MATCHED COILS

Application date, 13th May, 1932. No. 400693

To facilitate the manufacture of dual-range inductance coils, particularly as regards the final adjustments required for accurate matching, the medium-wave section is wound on a solenoid former with the final turns widely spaced so that the effective inductance can be varied slightly by shifting them up or down. The long-wave section is split up between several different bobbins, which are mounted concentrically about the first former and are separated from each other by spacing discs, the necessary fine adjustment being effected by altering the pressure of a screw-threaded ring bearing on the bobbin-assembly.

Patent issued to V. G. Van Colle, and Ward & Goldstone, Ltd.

REACTION CONTROLS

Application date, 9th May, 1932. No. 400687

In a receiving circuit designed to operate over a wide range of wavelengths, say from 15 to 20,000 metres, two separate reaction circuits are provided. The first consists of a coil $L1$ which is coupled to the input coil L, and is in series with a variable control condenser $C1$. The second, for the longer wavelengths, comprises a coil $L2$, which is coupled to a coil similar to L and is in series with a fixed condenser $C2$, both being shunted by a variable control resistance $R2$. A change-over switch S selects one or other of the two reaction circuits, according to the waveband, and may also

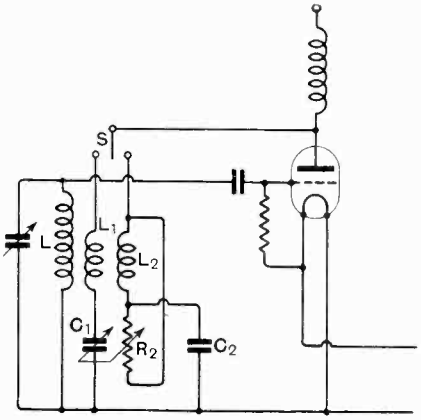

No. 400687.

change the input coil L. The condenser $C1$ and variable resistance $R2$ are ganged to a common control knob.

Patent issued to Siemens Bros. & Co., Ltd., M. Reed, and W. H. Andrews.

ULTRA-SHORT WAVE RECEIVERS

Convention date (Germany), 8th July, 1932. No. 400897

A valve operating in the Barkhausen-Kurz manner is divided into two electrode systems coupled together by condensers Ca, Cg between the two concentric anodes and the two grids respectively. The operating potentials are such that the left-hand portion functions as a regenerative amplifier, the electron periodicity being in tune

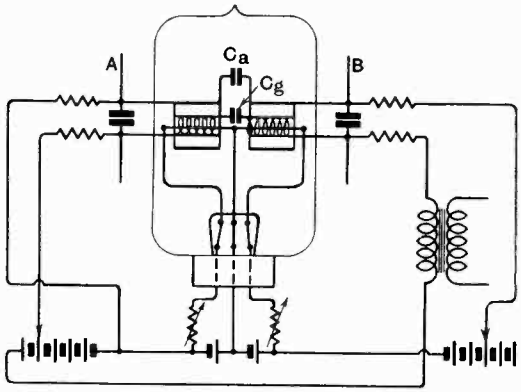

No. 400897.

with the signals received on the dipole aerial A. The right-hand portion serves as a demodulator, the electron "resonance" being well removed from the signal frequency. Lecher-wire couplings are used, the output circuit being tuned by a sliding bridge B.

Patent issued to Telefunken Ges. fur Drahtlose Telegraphie m.b.h.

TELEVISION SYSTEMS

Convention date (Germany), 7th March, 1932. No. 402291

The synchronising frequency used is a simple fraction of the line frequency and a multiple of the picture frequency. It is located in a little-used part of the transmission band, and has an amplitude greater than the maximum signal. In reception it is separated by a filter, and reduced, say, from 2,500 cycles to 25 cycles (the picture frequency) by successive circuits generating relaxation-oscillations. It is also multiplied up to the line frequency by a neon tube having an output tuned to the required harmonic frequency.

Patent issued to Radio Akt-Ges. D. S. Loewe.

REMOTE CONTROL

Convention date (Germany), 22nd August, 1932. No. 402016

Relates to the distant control by wireless of an unmanned station such as a fog-signal buoy. In order to reduce the expenditure of battery current, the receiving valves which respond to the controlling signal are energised only at periodic intervals by means of a local clockwork, which also varies the tuning of the receiving circuits over a small range in order to offset the effect of varying climatic conditions on the tuning of the receiving aerial.

The arrangement ensures effective operation by the distant transmitter under all conditions of wind and weather.

Patent issued to J. Pintsch A-G.

LOUD SPEAKERS

Application date, 27th November, 1931.
No. 402600

The object is to reduce "box resonance," particularly that due to the selective vibration of the air-column between the back and front of the casing, without the use of a large baffle-plate. The inner walls of the casing are packed with glass-silk or slag-wool *S*, held in position by a wire-mesh former so as to form a flared passage as shown. The thickness of the packing material at the front end of the casing should be at least half the diameter of the speaker diaphragm *D*. In a modified construction the top and bottom of the casing are omitted, leaving only the front wall and the two sides.

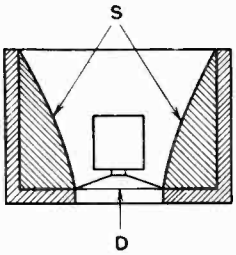

No. 402600.

Patent issued to H. L. Kirke, A. B. Howe, and A. E. Barrett.

AUTOMATIC VOLUME CONTROL

Convention date (U.S.A.), 31st March, 1932.
No. 402773

In a superhet receiver AVC voltage is built up across the grid-leak resistance of the second detector valve, which is of the low-impedance variable-mu type, and an opposed rectified voltage of less value is derived from the output circuit of the same valve. The arrangement is stated to give effective control of the sensitivity of the amplifier valves without producing overload distortion in the detector valve.

Patent issued to Hazeltine Corporation.

Convention date (U.S.A.), 6th April, 1932.
No. 402981

In order to even-up the gain control, *i.e.* to reduce the ratio of maximum to minimum output, a biasing-voltage developed across a resistance in the output of a diode detector is applied to the grid of a variable-mu valve having this characteristic: that the product of the change in grid bias and the mutual conductance of the valve remains substantally constant over a wide variation of the applied bias.

Patent issued to Hazeltine Corporation.

CONDENSER MICROPHONES

Application date, 27th April, 1932. No. 400629

In a condenser or electrostatic type of microphone it is usual to tension the diaphragm so as to shift its natural resonance beyond the limits of the frequencies to be handled. This tends to make the instrument insensitive; also, owing to the narrow spacing, there is a tendency to "arcing" which leads to the formation of "pimples" on the diaphragm. According to the invention the fixed diaphragm is made of gold foil which is substantially untensioned, the air-space between it and the fixed casing being such that the pressure within that space is practically unaffected by the movement imparted to the diaphragm in normal operation. The effective weight of the gold-foil diaphragm is less than the air pressure applied to it by sound waves up to 8,000 or 10,000 cycles.

Patent issued to Telephone Manufacturing Co., Ltd., and B. J. Burridge.

SAFETY DEVICES FOR CATHODE-RAY TUBES

Application date, 7th July, 1932. No. 402181

Various means are described for preventing the sensitised surface of a cathode-ray tube from being burnt or damaged by the cathode discharge stream in the event of failure of the "saw toothed" deflecting voltages, or on switching-off. In the first case an auxiliary Neon-tube oscillator circuit keeps the ray in motion in the absence of synchronising signals, or a biased valve comes automatically into operation to reduce the intensity of the main discharge. In the second case a high negative potential is applied to the control grid of the cathode-ray tube. This bias is derived from the rectifier supplying the generator of the deflecting voltages so that the strength of the ray is cut down immediately the "off" switch is operated.

Patent issued to Electric and Musical Industries, Ltd., and M. Bowman-Manifold.

DIRECTIONAL AERIALS

Convention date (U.S.A.), 29th July, 1931.
No. 402834

The aerial comprises a paraboidal network *N* of wires extending from a sheet-metal reflector *R* forming the apex of the structure. The main network is supported by a series of guyed masts 1 — — — 4, whilst the copper base is mounted on a tripod *T*. The aerial is stated to be efficient for wavelengths differing slightly from that for which

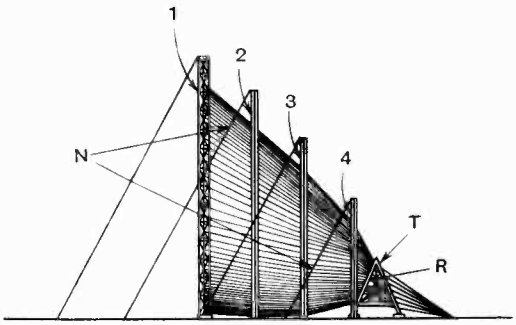

No. 402834.

it is specifically designed, thus allowing for such changes as are necessary to compensate for different attenuation conditions during a twenty-four hour period.

Patent issued to Federal Telegraph Co.

PUSH-PULL AMPLIFIERS

Convention date (Germany), 25th February, 1932. No. 402964

In quiescent push-pull amplifiers of the kind in which the effective grid-bias is determined by the voltage-drop across a resistance inserted in the anode-cathode circuit, distortion is likely to arise

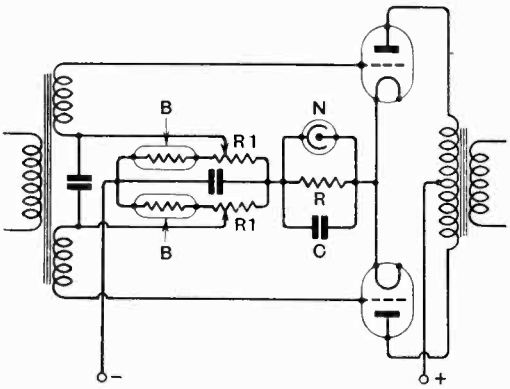

No. 402964.

for large signal voltages, particularly if the amplitude is such that the plate current falls to zero during negative half-cycles. In order to avoid this source of trouble, a constant-current device, such as a baretter *B*, is inserted in series with a tapped resistance *R*1 in each of the grid leads. In addition the main biasing-resistance *R* is shunted by a constant-voltage device, such as a Neon lamp *N*, and a condenser *C*.

Patent issued to Telefunken Ges. für Drahtlose Telegraphie M.V.H.

REFLEX CIRCUITS

Convention date (U.S.A.), 26th July, 1932. No. 403329

Relates to "reflex" receivers in which the same valve is used to amplify both high and low frequency currents, and particularly to the so-called "inverse" arrangement in which the order of amplification on the high-frequency side is opposed to the sequence of amplification on the low-frequency side. Such circuits are seldom used under modern conditions of high-powered transmission, and high-mu valves, owing to the tendency to overload and to produce distortion and "modulation howl." According to the invention these difficulties are overcome by applying an automatic gain-control voltage derived from the output of the detector valve to reflexed amplifiers of the variable-mu type, *i.e.*, valves with a logarithmic characteristic and a remote "cut-off."

Patent issued to Marconi's Wireless Telegraph Co., Ltd.

KERR CELLS

Application dates, 13th July, 28th September, and 6th December, 1932. No. 403155

The nickel-foil electrodes of a Kerr cell are each provided with a projecting lug in the centre of one edge so that they can all be conveniently fused or bonded together. The electrodes are faced and separated by thin glass "spacers" and, after assembly, the whole unit is placed in an oven and slowly raised to a temperature of between 500° and 550° C. The corners of the spacing strips are then melted together to form a rigid unit by means of a blow-pipe.

Patent issued to W. W. Jacomb, and Baird Television.

STABILISED OSCILLATION GENERATORS

Application dates, 21st June and 28th September, 1932. No. 403130

In a valve oscillator of the dynatron type, *i.e.*, one operated by secondary emission, the generated frequency usually varies with the applied voltages, owing at least in part to changes in valve-capacity following changes in the concentration or distribution of the electron stream. According to the invention this effect is offset, and the frequency is stabilised, by feeding the tuned plated circuit *A* from a potentiometer *P* which also supplies the grid bias. Any change in plate voltage will now be accompanied by a corresponding but opposite

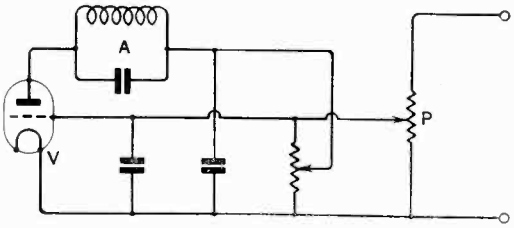

No. 403130.

alteration of grid potential, so that the frequency of oscillation is held constant.

Patent issued to Marconi's Wireless Telegraph Co., Ld., and G. B. Baker.

POWDER-CORED COILS

Convention date (U.S.A.), 16th March, 1931. No. 403426

The core is made movable in and out of the H.F. coil, for the purposes of tuning. In addition, instead of being homogeneous the core is "graded" so that the eddy-current losses vary along its length. The object is to maintain the inductance constant as the tuning is varied over the broadcast wave-band.

Patent issued to Johnson Laboratories Inc.